PLANS FOR

GENERAL SITE RECONSTRUCTION PROJECT

FARM LABOR CAMP

CALDWELL HOUSING AUTHORITY

CANYON COUNTY, IDAHO

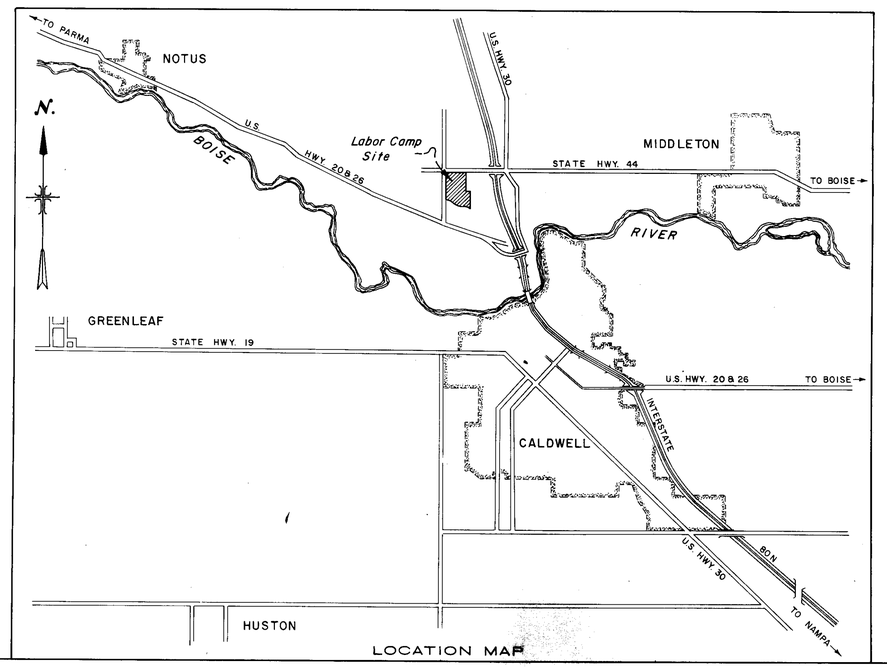

LOCATION MAP

ENGINEER:
J-U-B ENGINEERS, INC.
Engineers — Planners
212 TENTH AVENUE SO.
NAMPA, IDAHO

OWNER:
CALVIN E. BURNS, Chairman
ROBERT L. KERFOOT, Secretary
HOUSING AUTHORITY
CITY OF CALDWELL
CANYON COUNTY, IDAHO

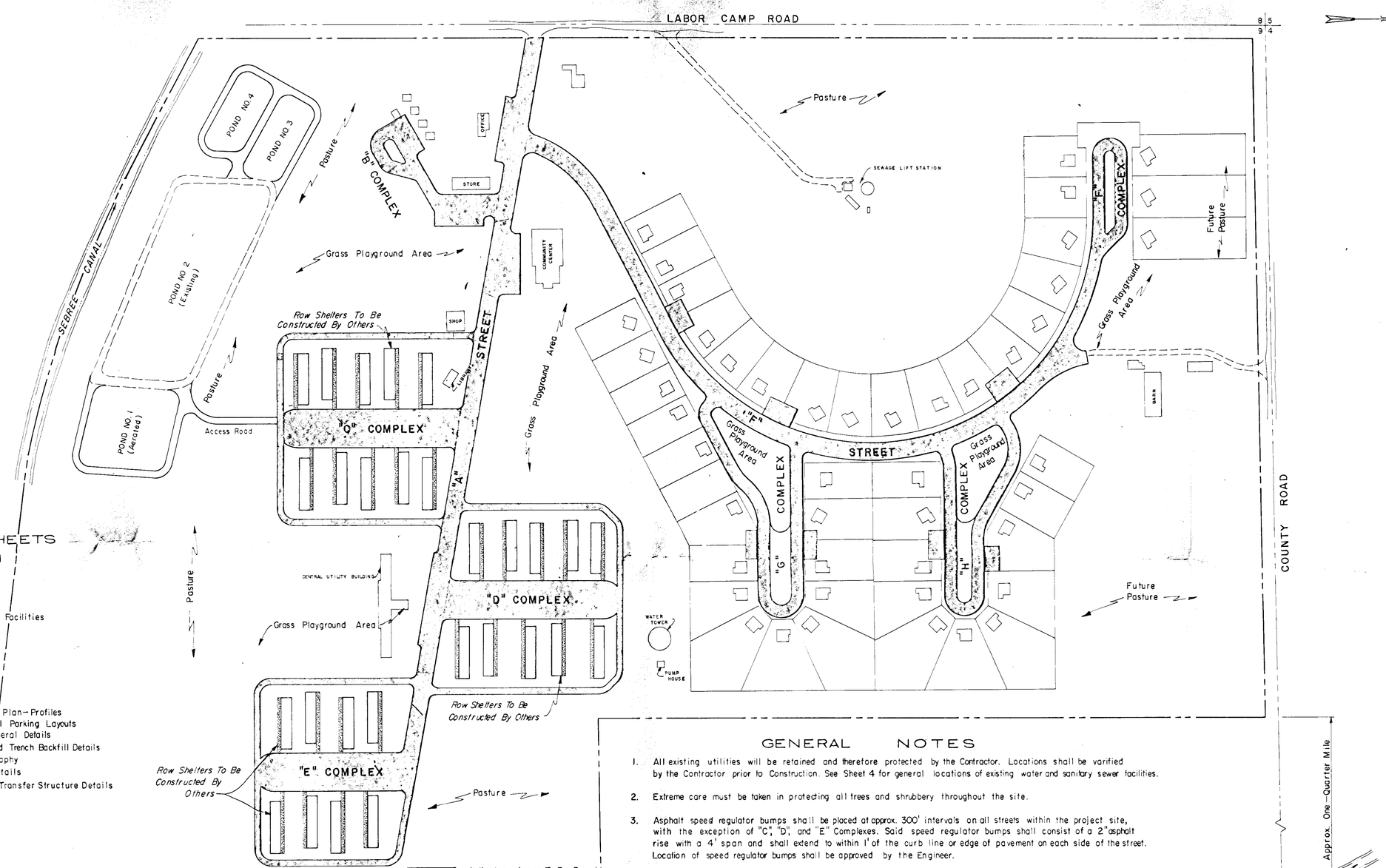

Indicates Areas To Be Paved (Individual Parking Pads Are Not Shown)

INDEX OF SHEETS

SHEET NO.	DESCRIPTION
1.	Title Page
2.	Index Map
3.	Site Removal
4.	Existing Water and Sanitary Sewer Facilities
5.	"A" and "F" Street Plan – Profile
6.	"B" and "F" Complex
7.	"C" Complex
8.	"D" Complex
9.	"E" Complex
10.	"G" Complex
11.	"H" Complex
12.	Storm Sewer and Irrigation Inlet Plan – Profiles
13.	Fencing, Irrigation and Individual Parking Layouts
14.	Typical Street Sections and General Details
15.	Fencing, Catch Basin, Manhole and Trench Backfill Details
16.	Sewage Lagoon Site and Topography
17.	Dike Sections and Structure Details
18.	Parshall Flume, Inlet, Outlet and Transfer Structure Details
19.	Lagoon Electrical Details
20.	Sewage Lift Station Modification

GENERAL NOTES

1. All existing utilities will be retained and therefore protected by the Contractor. Locations shall be varified by the Contractor prior to Construction. See Sheet 4 for general locations of existing water and sanitary sewer facilities.
2. Extreme care must be taken in protecting all trees and shrubbery throughout the site.
3. Asphalt speed regulator bumps shall be placed at approx. 300' intervals on all streets within the project site, with the exception of "C", "D", and "E" Complexes. Said speed regulator bumps shall consist of a 2" asphalt rise with a 4' span and shall extend to within 1' of the curb line or edge of pavement on each side of the street. Location of speed regulator bumps shall be approved by the Engineer.
4. Design elevations are to flow line, top of concrete, or finished ground.
5. Roadways shall be kept passable during construction to provide access for Building Contractor(s).
6. All areas around existing individual housing units within the limits of the yard fencing shall be graded and reseeded to conform with existing improved areas.

MASTER LEGEND FOR PLAN SHEETS

EXISTING		TO BE CONSTRUCTED	
—x—	Fence		Asphalt Curb
	Ditch		Catch Basin
	Power Pole	—D—	Storm Sewer
	Street Light Pole		Manhole
	Anchor	—I—	Irrigation Pipe Line
	Tree		Irrigation Riser
	Hedge	—x—	Fence
—S—	Sanitary Sewer		Slope Limits
—PS—	Pressure Sewer	(71.34)	Design Elevations
	Manhole		Asphalt Drain Channel
—W—	Water Main		
	Fire Hydrant		
• 73.9	Existing Elevations		

REGISTERED PROFESSIONAL ENGINEER 777 STATE OF IDAHO HUNTER M. JOHNSON

FARM LABOR CAMP
CALDWELL HOUSING AUTHORITY

INDEX MAP

J-U-B ENGINEERS, INC.
Engineers Planners
Nampa Idaho

DES. JR DR. CK. SHEET 2 OF 20
SCALE 1" = 100' DATE SEPT., 1969 DWG. NO. 690901-02

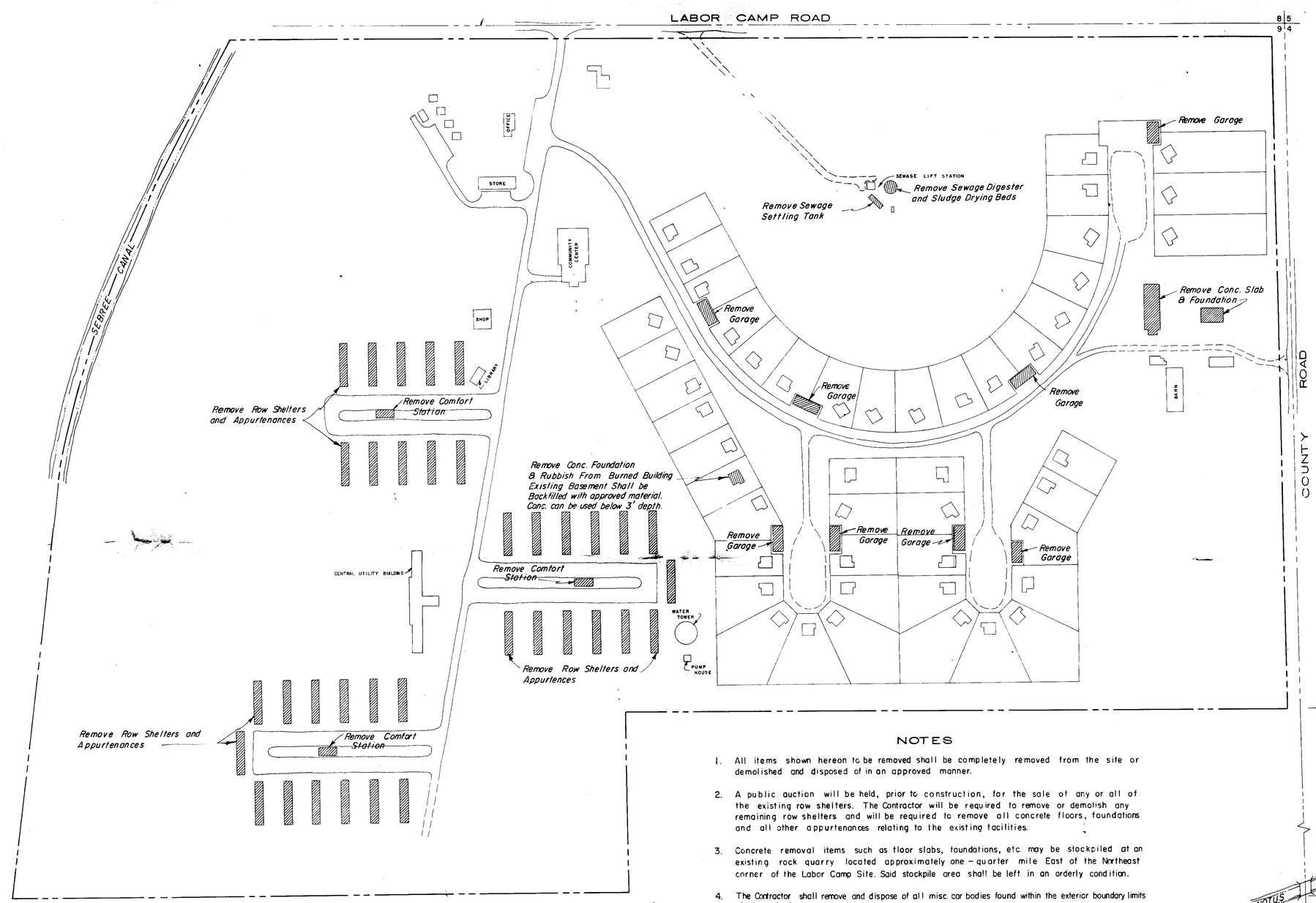

NOTES

1. All items shown hereon to be removed shall be completely removed from the site or demolished and disposed of in an approved manner.
2. A public auction will be held, prior to construction, for the sale of any or all of the existing row shelters. The Contractor will be required to remove or demolish any remaining row shelters and will be required to remove all concrete floors, foundations and all other appurtenances relating to the existing facilities.
3. Concrete removal items such as floor slabs, foundations, etc. may be stockpiled at an existing rock quarry located approximately one - quarter mile East of the Northeast corner of the Labor Camp Site. Said stockpile area shall be left in an orderly condition.
4. The Contractor shall remove and dispose of all misc. car bodies found within the exterior boundary limits of the project.
5. Existing fences around the individual housing units will be removed, prior to construction, by Housing Authority personel.
6. All trash cans and trash can holders are the property of the Housing Authority and will be removed by Housing Authority personel prior to construction.
7. Removal of trees and shrubbery shall be as called for in the plans.
8. Existing utilities into buildings being removed shall be disconnected and pluged below frost line.
9. The Owner shall have until October 15, 1969 to remove that portion of the existing Row Shelters above the conc floor slab in the two Easterly Complexes (Refered to as "D" & "E" Complexes on the plan sheets) and the Owner shall have until November 1, 1969 to remove said portion of the existing shelters in the Westerly Complex (Refered to as "C" Complex on the plan Sheets

LEGEND

- Facility to be Removed
- Facility to be Retained
- Exterior Boundary Limit of Project

3/4/69

FARM LABOR CAMP
CALDWELL HOUSING AUTHORITY

SITE REMOVAL

J-U-B ENGINEERS, INC.
Engineers Planners
Nampa Idaho

DES. DR. CK. SHEET 3 OF 20

SCALE 1" = 100'

DATE SEPT., 1969

DWG. NO. 690901-03

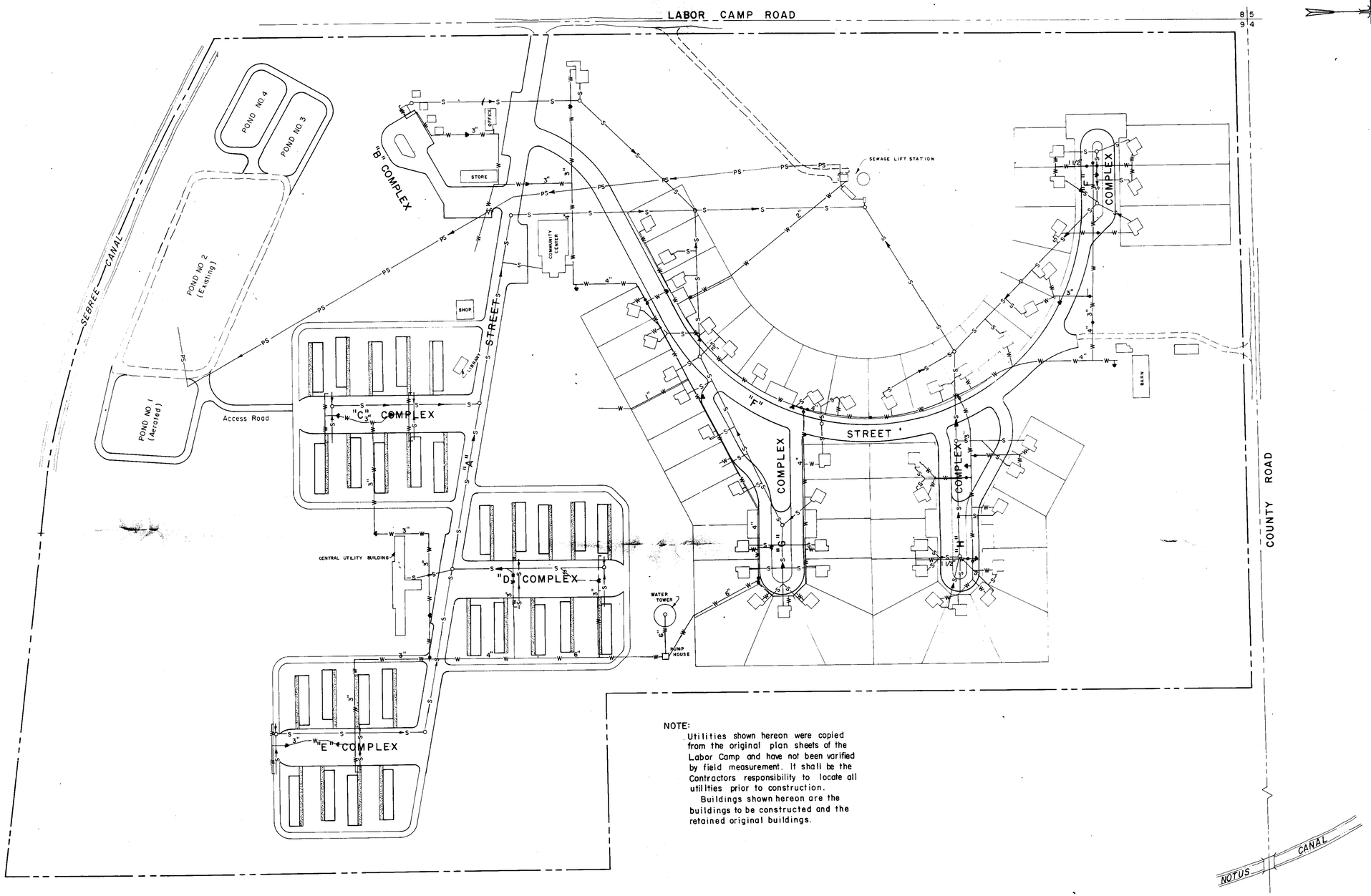

NOTE:

Utilities shown hereon were copied from the original plan sheets of the Labor Camp and have not been varified by field measurement. It shall be the Contractors responsibility to locate all utilities prior to construction.

Buildings shown hereon are the buildings to be constructed and the retained original buildings.

LEGEND

—W—	Existing Water Lines
♥	Fire Hydrant
•	Valve
—S—	Existing Sanitary Sewer
—PS—	Existing Pressure Sewer
○	Manhole

FARM LABOR CAMP
CALDWELL HOUSING AUTHORITY

EXISTING WATER AND
SANITARY SEWER FACILITIES

J-U-B ENGINEERS, INC.
Engineers Planners
Nampa Idaho

DES. DR. CK. SHEET 4 OF 20

SCALE 1" = 100' DATE SEPT., 1969 DWG. NO. 690901-04

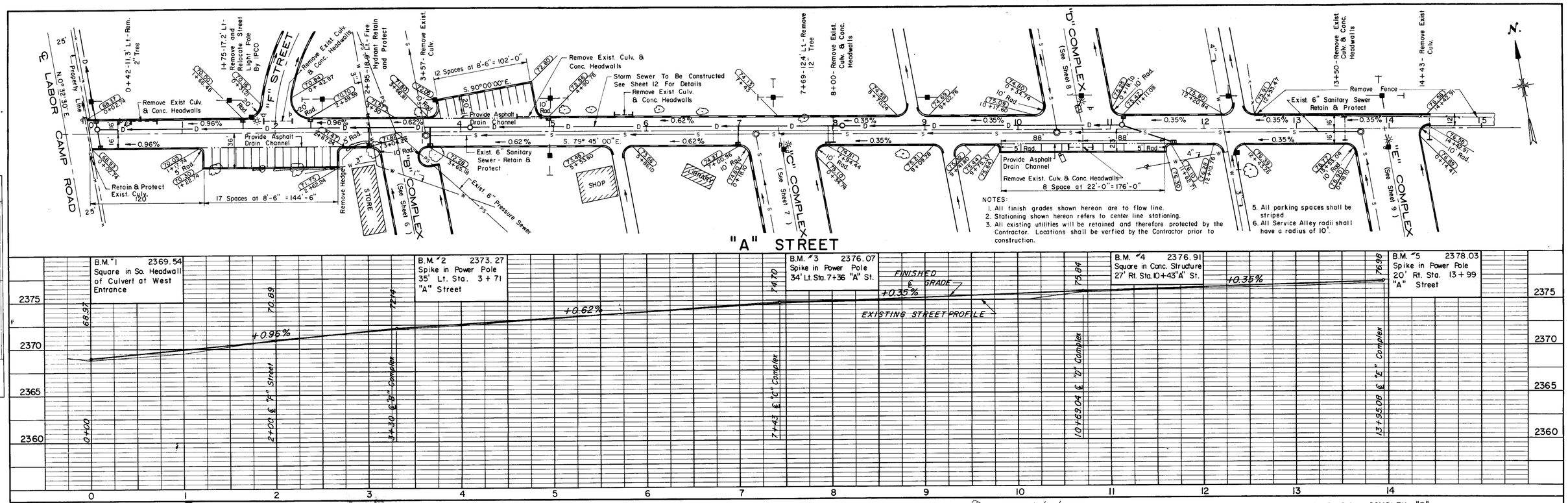

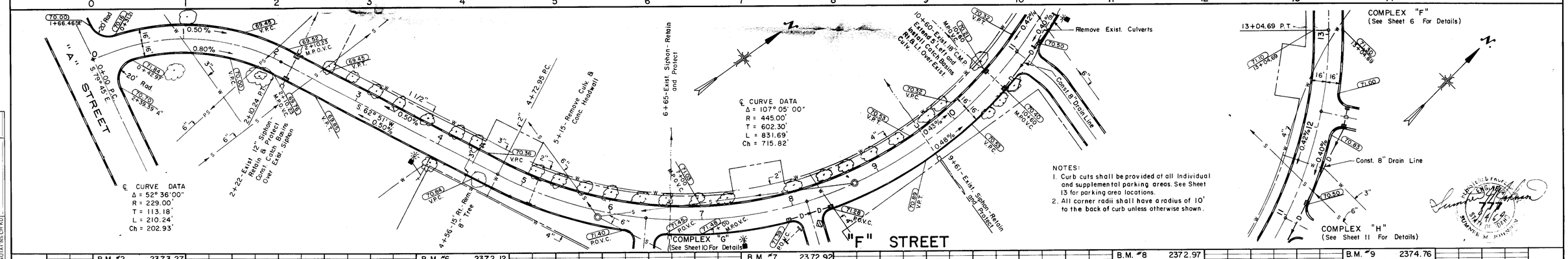

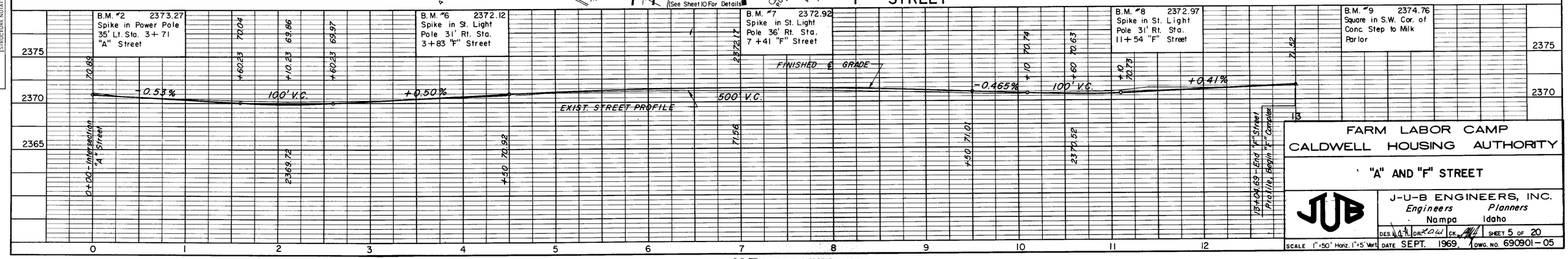

FARM LABOR CAMP
CALDWELL HOUSING AUTHORITY

"A" AND "F" STREET

J-U-B ENGINEERS, INC.
Engineers Planners
Nampa Idaho

DES. D.L.T. DR. RDW CK. SHEET 5 OF 20
SCALE 1"=50' Horiz. 1"=5' Vert. DATE SEPT. 1969 DWG. NO. 690901-05

PLAN: SURVEYED, PLOTTED, ALIGNMENT CHECKED, RT. OF WAY CHECKED, NOTE BOOK NO., DATE, BY

PROFILE: SURVEYED, PLOTTED, GRADES CHECKED, B.M. NOTED, STRUCTURE NOTATIONS CHKD, NOTE BOOK NO., DATE, BY

K+E PLATE 2, PLAN-PROFILE KEUFFEL & ESSER CO.

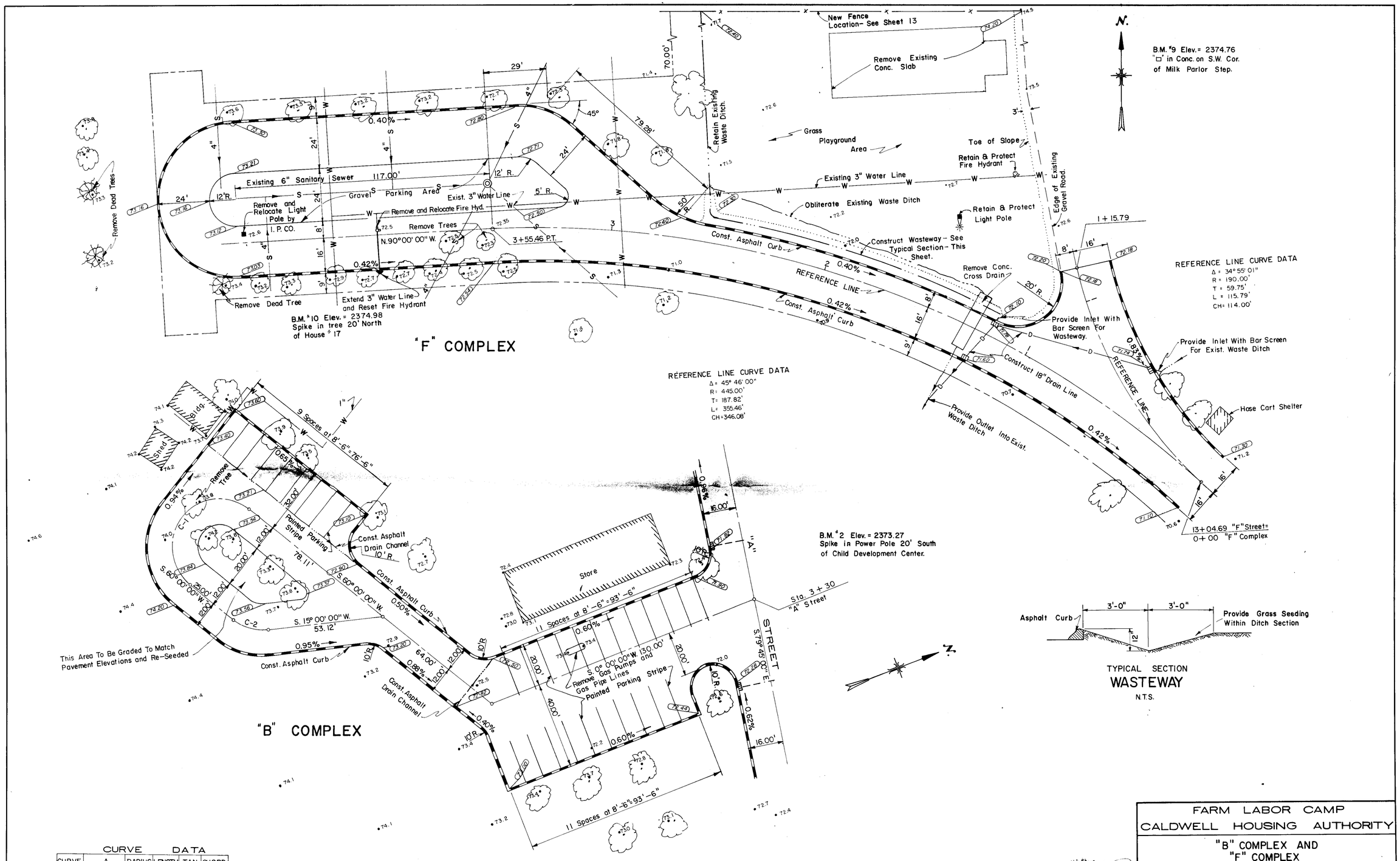

CURVE DATA

CURVE	Δ	RADIUS	LENGTH	TAN.	CHORD
C-1	180° 00' 00"	22.00'	69.12'	—	44.00'
C-2	45° 00' 00"	22.00'	17.28'	9.11'	16.84'

FARM LABOR CAMP
CALDWELL HOUSING AUTHORITY

"B" COMPLEX AND
"F" COMPLEX

J-U-B ENGINEERS, INC.
Engineers Planners
Boise Idaho

DES. DR. CK. SHEET 6 OF 20

SCALE 1" = 20' DATE SEPT., 1969 DWG. NO. 690901-06

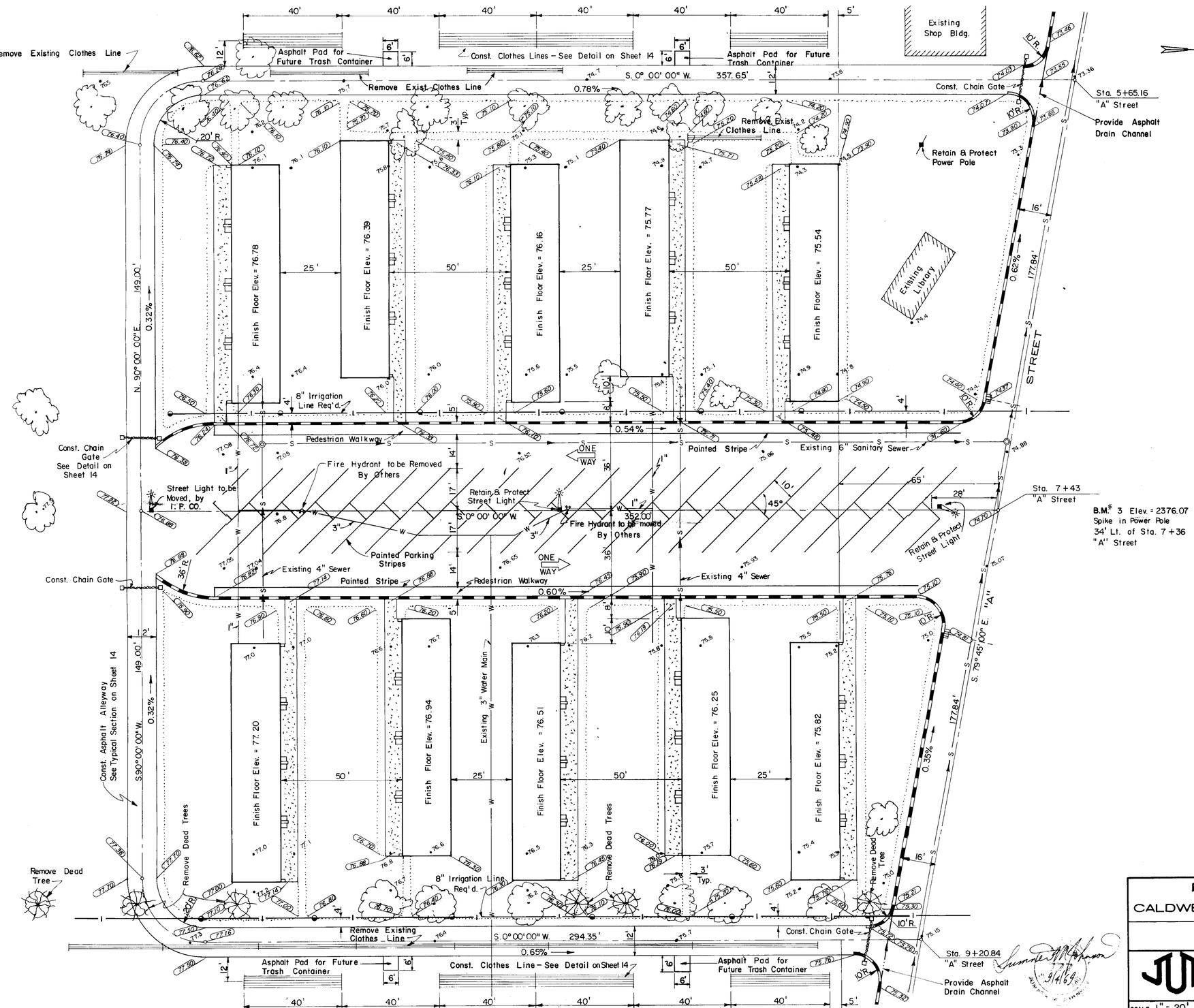

FARM LABOR CAMP
CALDWELL HOUSING AUTHORITY

"C" COMPLEX

J-U-B ENGINEERS, INC.
Engineers Planners
Nampa Idaho

DES. DR. CK. SHEET 7 OF 20

SCALE 1" = 20' DATE SEPT. 1969 DWG. NO. 690901-07

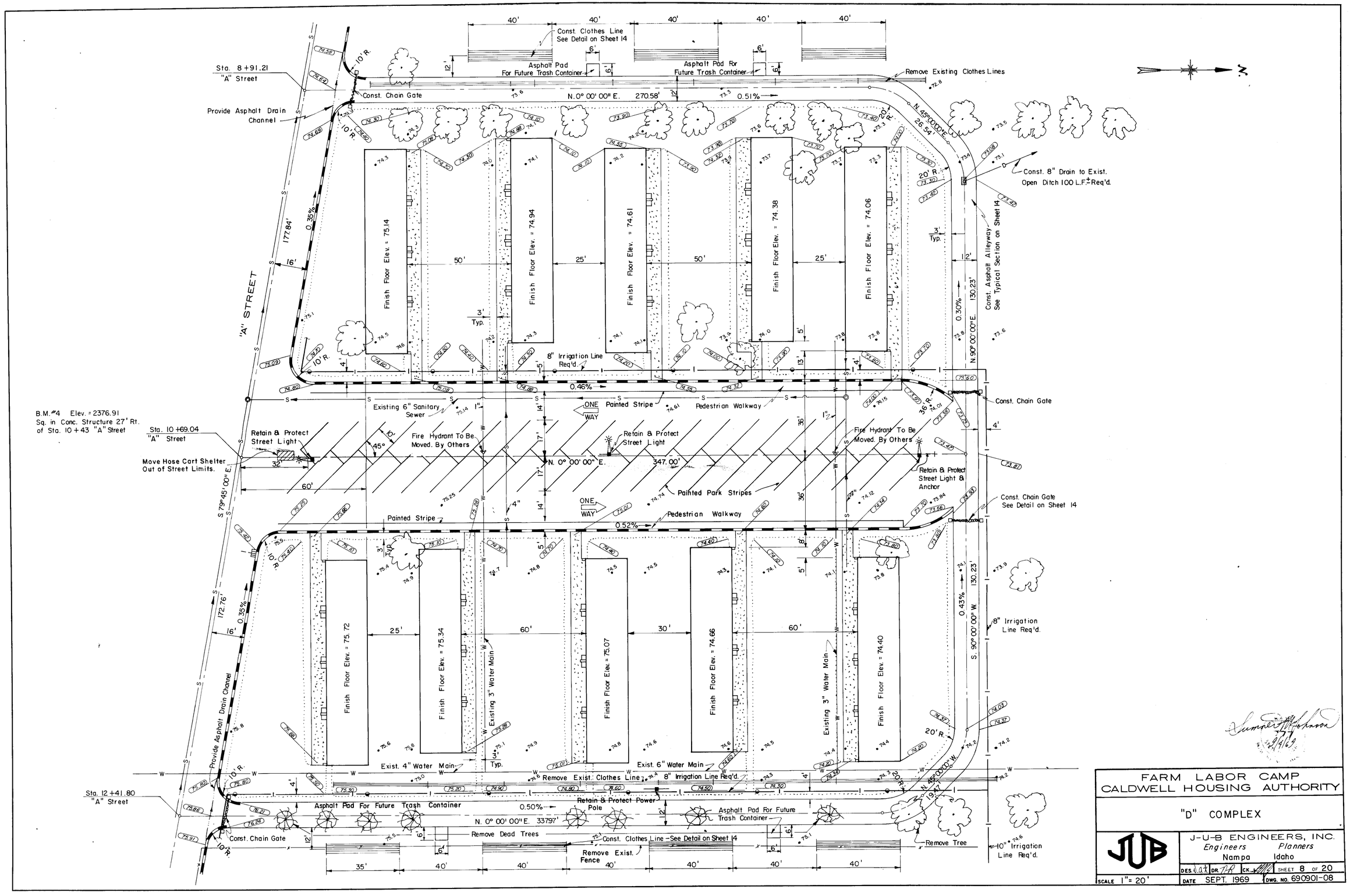

FARM LABOR CAMP
CALDWELL HOUSING AUTHORITY

"D" COMPLEX

J-U-B ENGINEERS, INC.
Engineers Planners
Nampa Idaho

DES. J.A.K. DR. T.R. CK. J.A.K. SHEET 8 OF 20

SCALE 1" = 20' DATE SEPT. 1969 DWG. NO. 690901-08

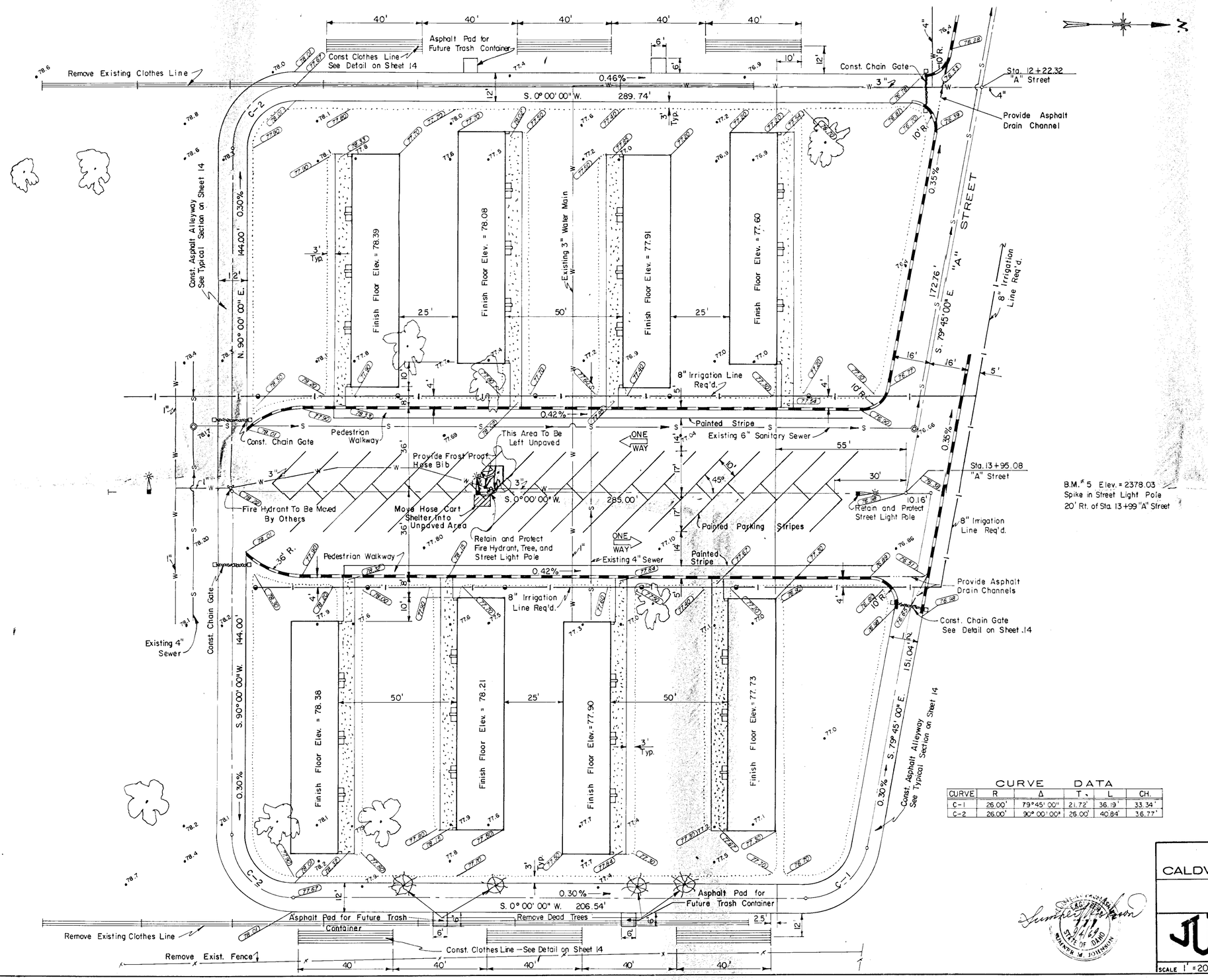

CURVE DATA

CURVE	R	Δ	T	L	CH.
C-1	26.00'	79°45' 00"	21.72'	36.19'	33.34'
C-2	26.00'	90° 00' 00"	26.00'	40.84'	36.77'

FARM LABOR CAMP
CALDWELL HOUSING AUTHORITY

"E" COMPLEX

J-U-B ENGINEERS, INC.
Engineers Planners
Nampa Idaho

SCALE 1" = 20' | DES. | DR. | CK. | SHEET 9 OF 20
DATE SEPT. 1969 | DWG. NO. 690901-09

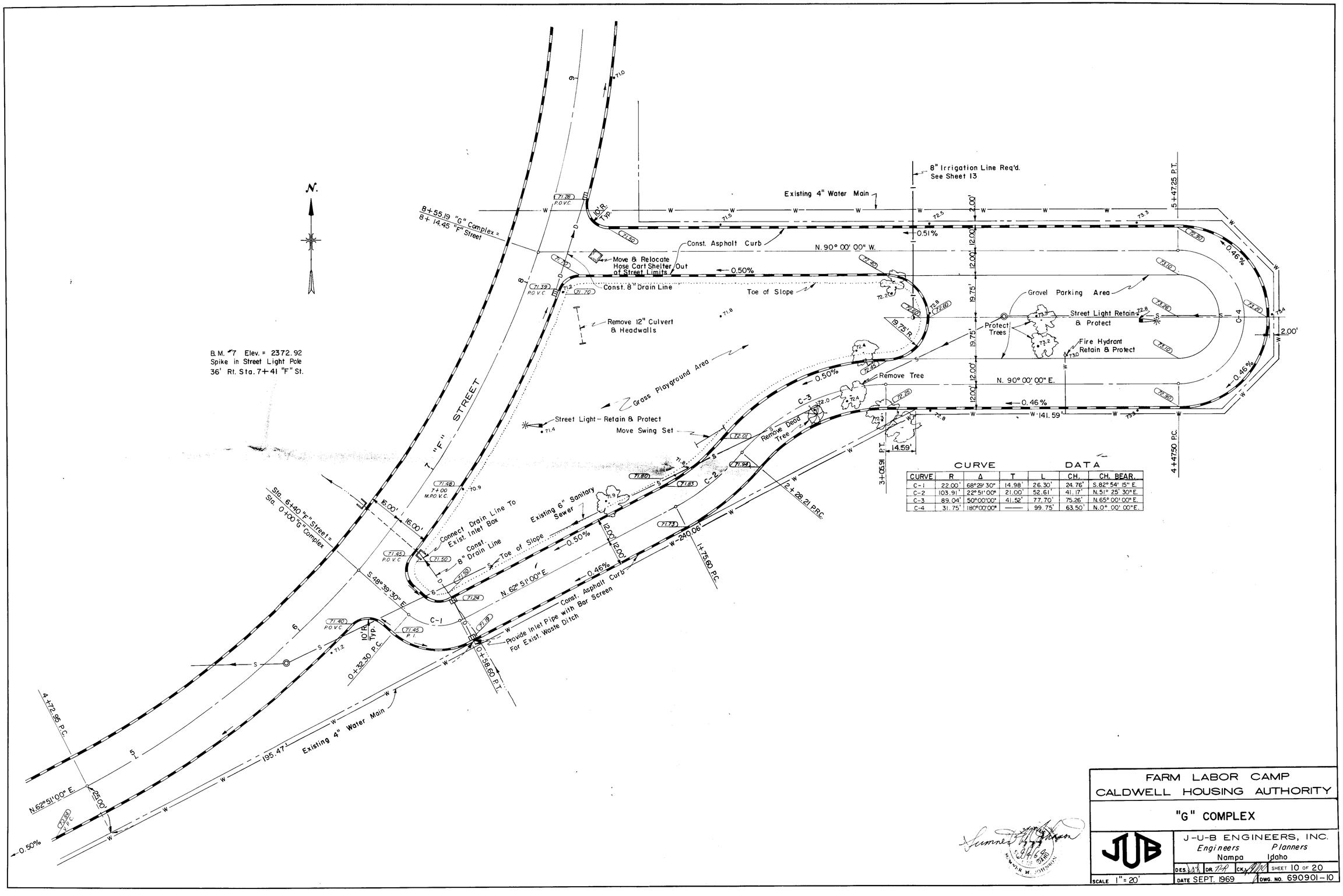

CURVE DATA

CURVE	R	Δ	T	L	CH.	CH. BEAR.
C-1	22.00'	68°29' 30"	14.98'	26.30'	24.76'	S.82° 54' 15" E.
C-2	103.91'	22° 51' 00"	21.00'	52.61'	41.17'	N.51° 25' 30" E.
C-3	89.04'	50°00'00"	41.52'	77.70'	75.26'	N.65° 00' 00" E.
C-4	31.75'	180°00'00"	——	99.75'	63.50'	N.0° .00' 00" E.

FARM LABOR CAMP
CALDWELL HOUSING AUTHORITY

"G" COMPLEX

J-U-B ENGINEERS, INC.
Engineers Planners
Nampa Idaho

DES. DR. CK. SHEET 10 OF 20
SCALE 1" = 20' DATE SEPT. 1969 DWG. NO. 690901-10

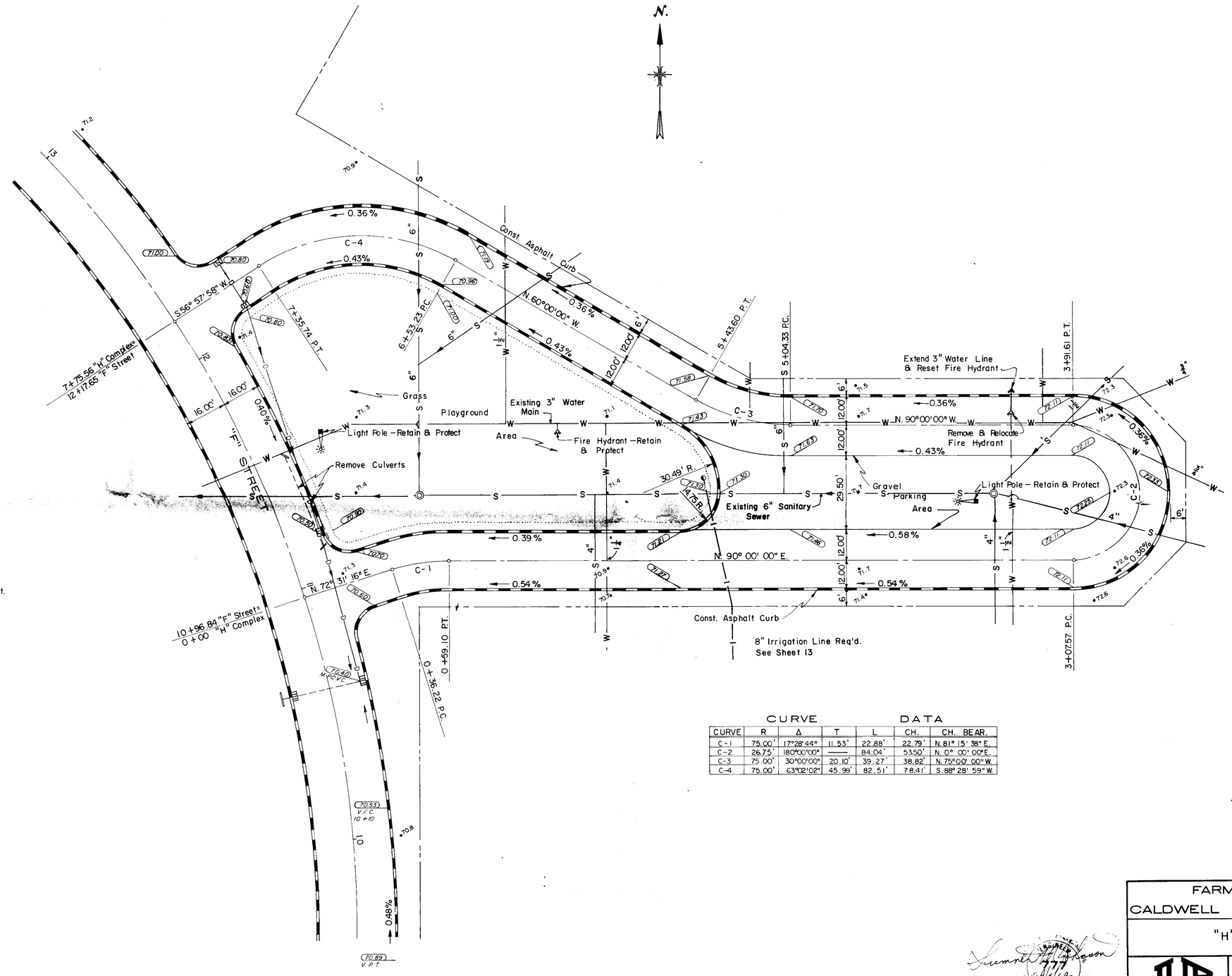

B.M. #8 Elev. = 2372.97
Spike in Street Light Pole
31' Rt. of Sta. 11+54 "F" St.

CURVE DATA

CURVE	R	Δ	T	L	CH.	CH. BEAR.
C-1	75.00'	17°28'44"	11.53'	22.88'	22.79'	N. 81° 15' 38" E.
C-2	26.75'	180°00'00"	——	84.04'	53.50'	N. 0° 00' 00" E.
C-3	75.00'	30°00'00"	20.10'	39.27'	38.82'	N. 75°00' 00" W.
C-4	75.00'	63°02'02"	45.99'	82.51'	78.41'	S. 88° 28' 59" W.

FARM LABOR CAMP
CALDWELL HOUSING AUTHORTY

"H" COMPLEX

J-U-B ENGINEERS, INC.
Engineers Planners
Nampa Idaho

DES. DR. CK. SHEET 11 OF 20
SCALE 1"=20' DATE SEPT. 1969 DWG. NO. 690901-11

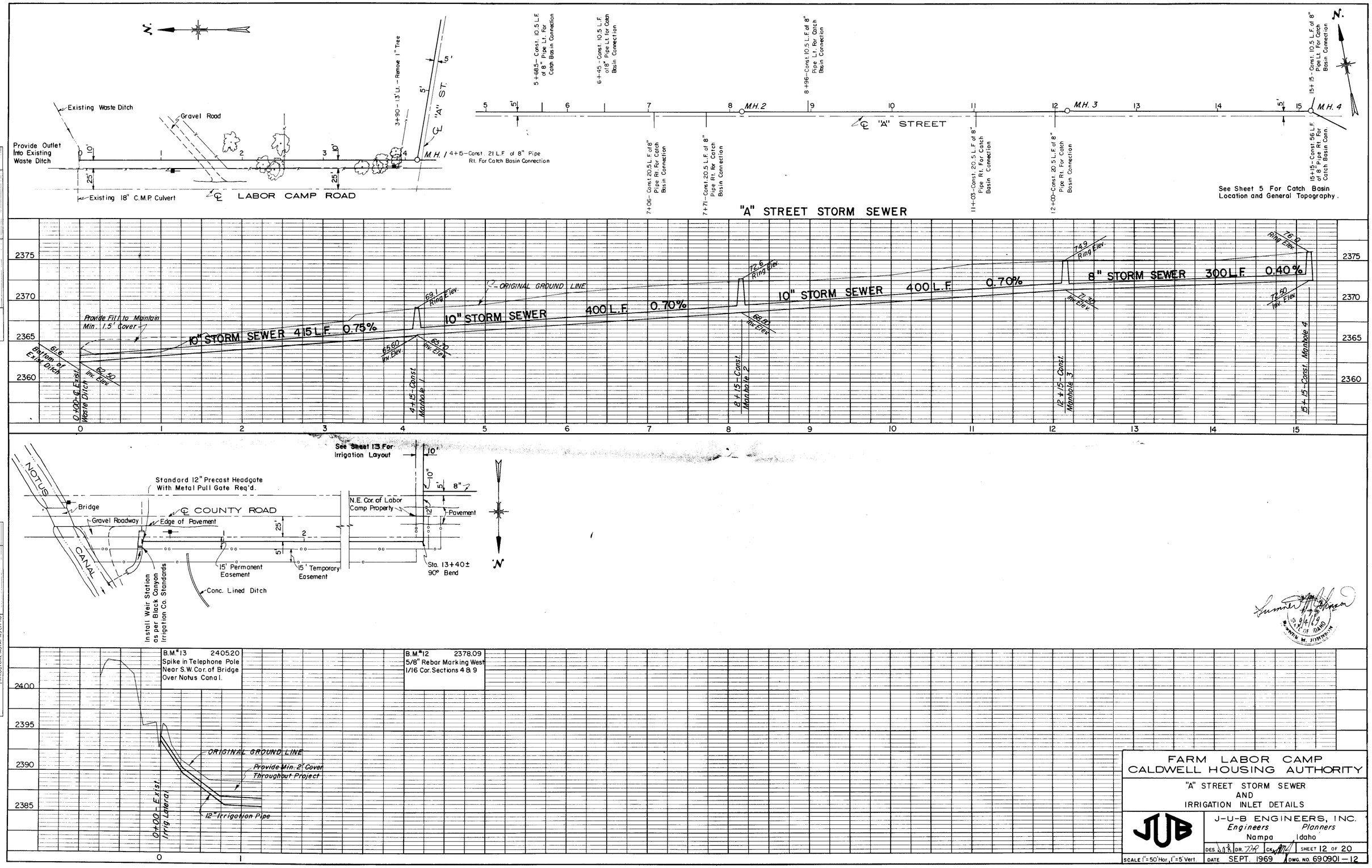

PLAN
NOTE BOOK
NO.
SURVEYED
PLOTTED
ALIGNMENT CHECKED
RT. OF WAY CHECKED
BY
DATE

PROFILE
NOTE BOOK
NO.
SURVEYED
PLOTTED
GRADES CHECKED
B.M. VERIFIED
STRUCTURE NOTATIONS CH'KD
BY
DATE

FARM LABOR CAMP
CALDWELL HOUSING AUTHORITY

"A" STREET STORM SEWER
AND
IRRIGATION INLET DETAILS

J-U-B ENGINEERS, INC.
Engineers Planners
Nampa Idaho

DES. DR. CK. SHEET 12 OF 20
SCALE 1"=50' Hor., 1"=5' Vert. DATE SEPT. 1969 DWG. NO. 690901 – 12

K+E PLATE 2, PLAN-PROFILE
KEUFFEL & ESSER CO.

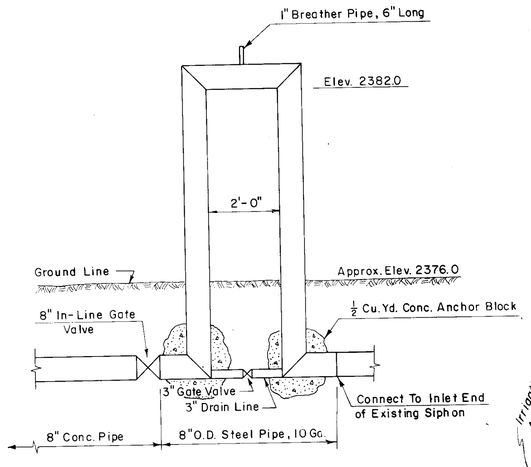

CROSS-SECTION
OVERFLOW SIPHON
IRRIGATION SYSTEM
SCALE: ½" = 1'-0"

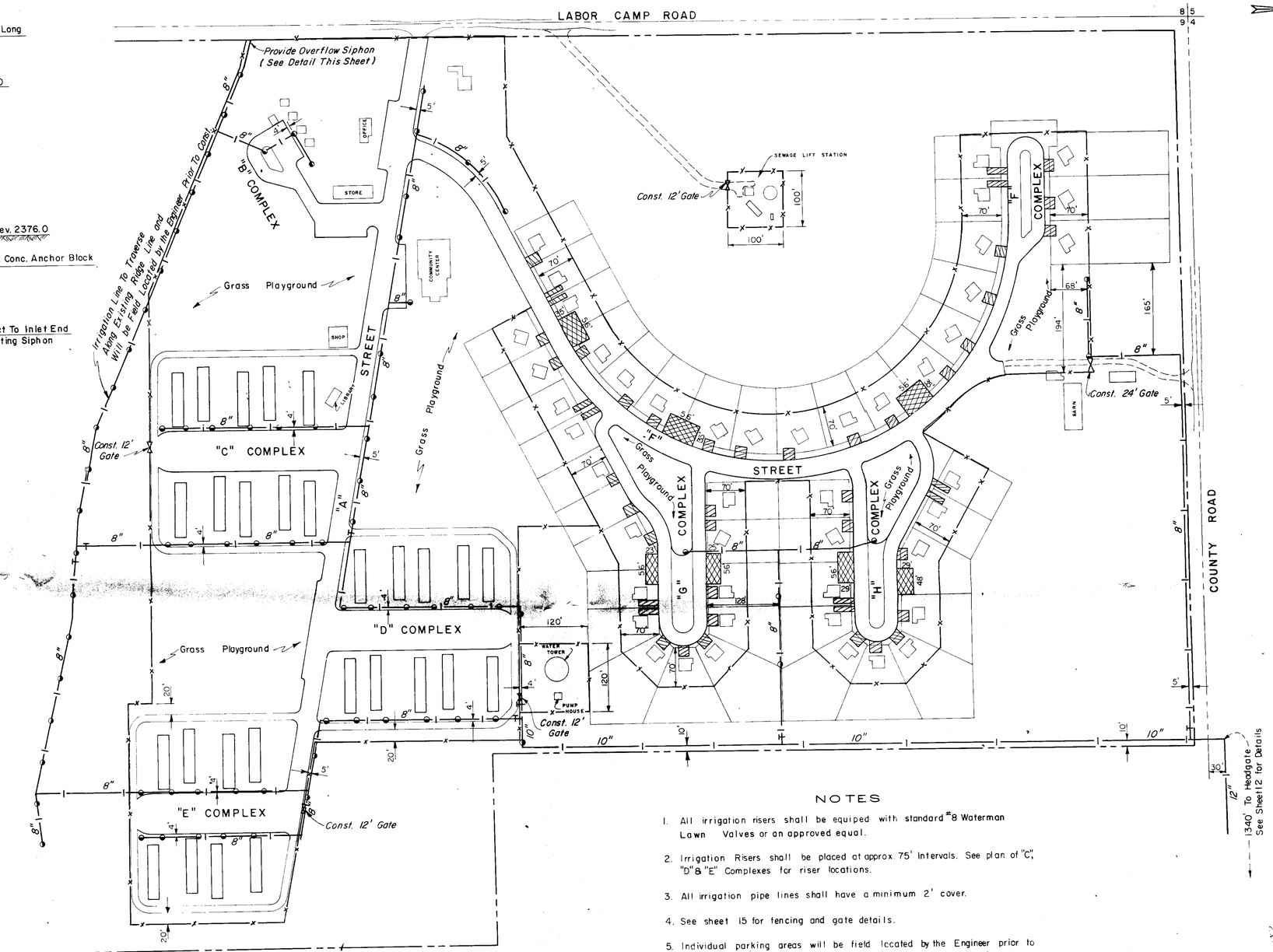

LEGEND

- Irrigation Line to be Constructed
- Irrigation Riser Required
- Drain Valve Required
- Fence to be Constructed
- Gate to be Constructed
- 18' x 20' Paved Parking Area Required
- 9' x 36' Paved Parking Area Required
- Supplemental Paved Parking Area, Size as Noted
- 8" In-Line Gate Valve Required

NOTES

1. All irrigation risers shall be equiped with standard #8 Waterman Lawn Valves or an approved equal.
2. Irrigation Risers shall be placed at approx. 75' Intervals. See plan of "C", "D" & "E" Complexes for riser locations.
3. All irrigation pipe lines shall have a minimum 2' cover.
4. See sheet 15 for fencing and gate details.
5. Individual parking areas will be field located by the Engineer prior to Construction. Size and number required will remain as shown hereon.
6. Supplemental parking areas will be constructed where existing garages are now located.
7. See Sheet 14 for Typical Section of individual parking areas.
8. See Sheet 16 for Lagoon fencing.
9. Where existing fences conflict with new fence construction the exist. fence shall be removed. Existing barbed wire may be salvaged and reused upon approval of the Engineer.
10. In-Line Gate Valves shall be 8" Pohl Line Gate Valves or an approvd equal.

Lamper A. Johnson 9/4/69

FARM LABOR CAMP
CALDWELL HOUSING AUTHORITY

IRRIGATION, FENCING AND INDIVIDUAL PARKING LAYOUTS

J-U-B ENGINEERS, INC.
Engineers Planners
Nampa Idaho

SCALE 1" = 100'

DES. DR. CK. SHEET 13 OF 20
DATE SEPT., 1969 DWG. NO. 690901-13

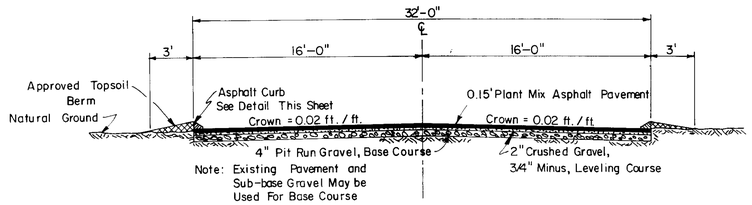

TYPICAL SECTION

"A" AND "F" STREETS

SCALE: 1" = 5'

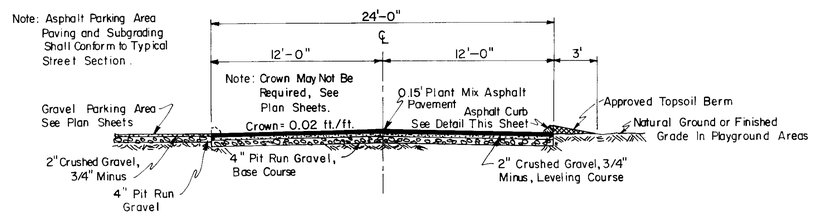

TYPICAL SECTION

"B", "F", "G" AND "H" COMPLEX

SCALE: 1" = 5'

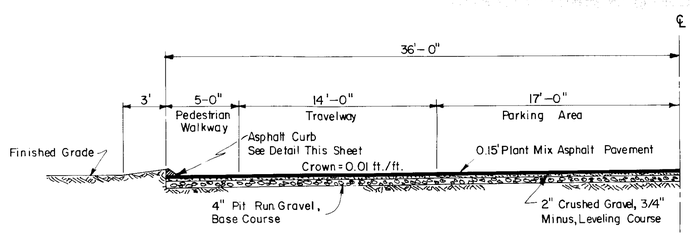

TYPICAL HALF SECTION

"C", "D" AND "E" COMPLEX

SCALE: 1" = 5'

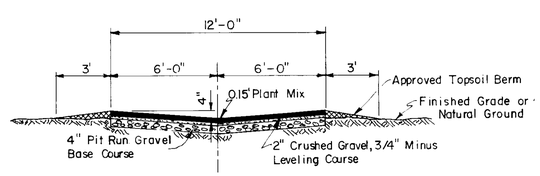

TYPICAL SECTION

ASPHALT ALLEYWAY

SCALE: 1" = 4'

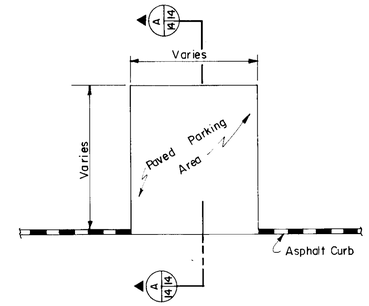

PLAN VIEW

SCALE: 1" = 10'

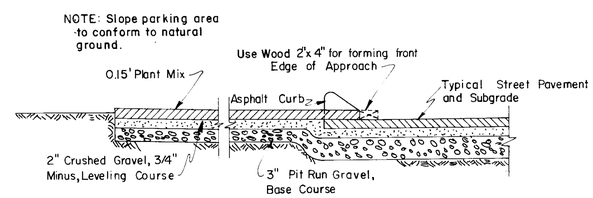

SECTION A 14/14

SCALE: 3/4" = 1'-0"

INDIVIDUAL PARKING AREA

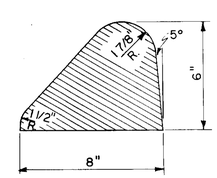

TYPICAL SECTION

ASPHALT CURB

SCALE: 3" = 1'-0"

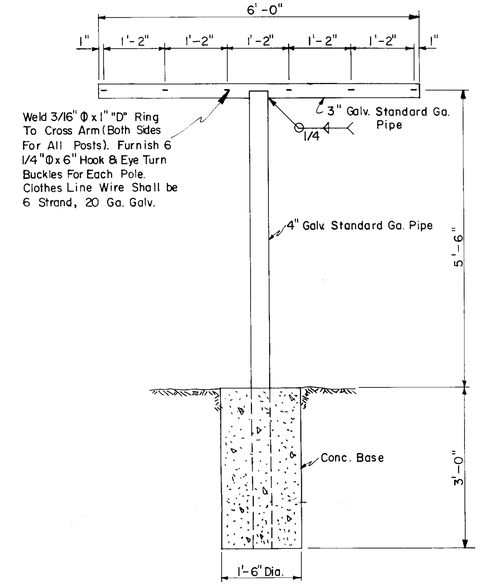

CLOTHES LINE POLE DETAIL

SCALE: 3/4" = 1'-0"

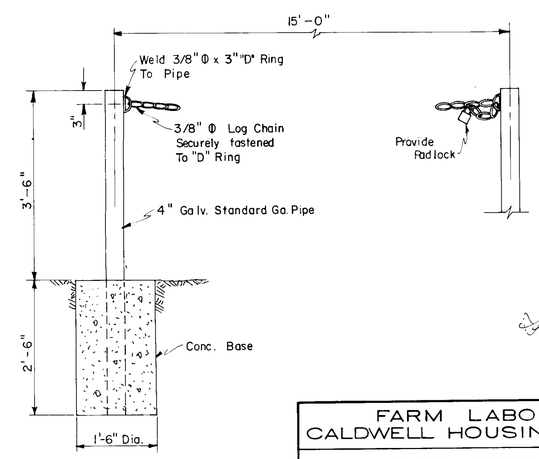

CHAIN GATE ANCHOR POST DETAIL

SCALE: 3/4" = 1'-0"

FARM LABOR CAMP
CALDWELL HOUSING AUTHORITY

TYPICAL STREET SECTIONS AND GENERAL DETAILS

J-U-B ENGINEERS, INC.
Engineers Planners
Nampa Idaho

SCALE AS SHOWN	DES.	DR.	CK.	SHEET 14 OF 20
	DATE SEPT. 1969			DWG. NO. 69 0901-14

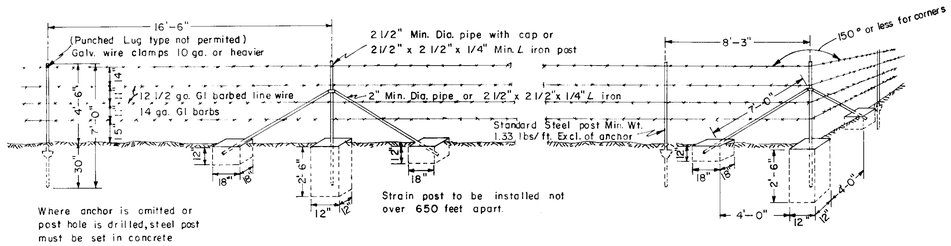

FENCE DETAILS

SCALE: $\frac{1}{4}$" = 1'-0"

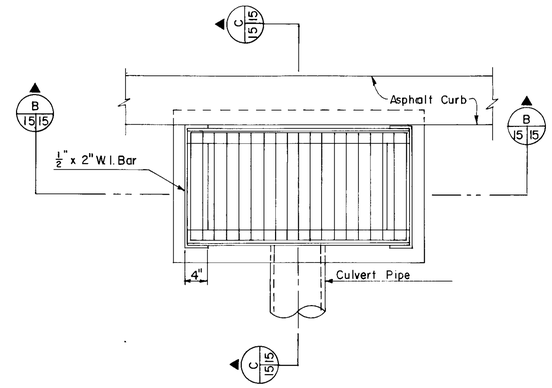

NOTES

1. Grating Shall Be $\frac{1}{2}$" x 2" W.I. Bars, 2" C.C. Welded on Each Side With $\frac{5}{16}$" Fillet Welds To $\frac{1}{2}$" x 2" W.I. Side Bars.
2. Overall Dimensions of Grating are $17\frac{3}{4}$" x 36".
3. Inside Dimensions of Frame are $18\frac{3}{4}$" x $36\frac{1}{2}$".

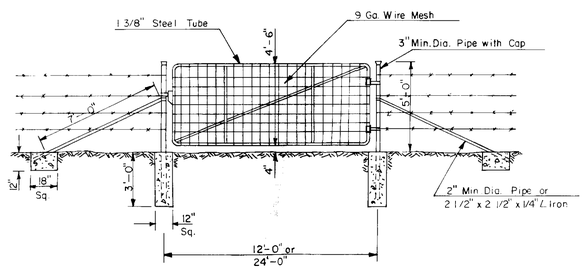

GATE DETAIL

SCALE: N.T.S.

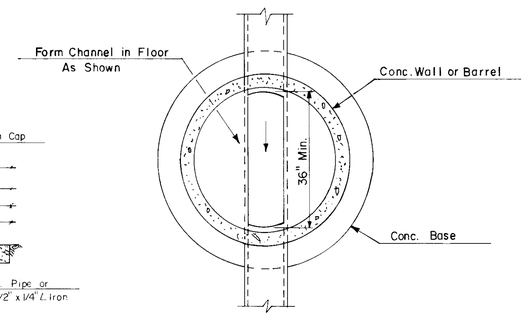

SECTION A/15|15

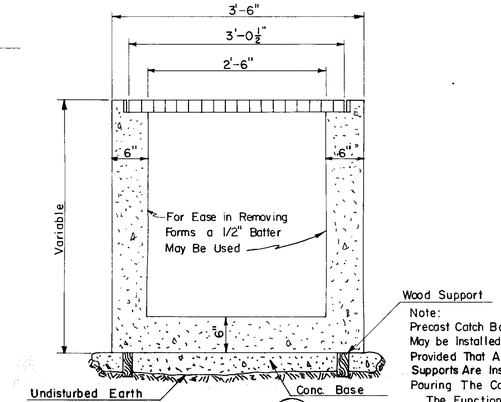

SECTION B/15|15

Note:
Precast Catch Basin and Conc. Base May be Installed at the Same Time Provided That Approved Wooden Supports Are Installed Prior To Pouring The Conc. Base.
The Function of the Conc. Base is to fill the Void Space Between the Catch Basin and Undisturbed Earth.

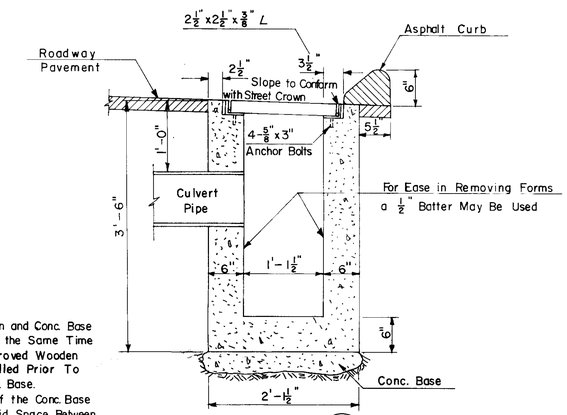

SECTION C/15|15

CONCRETE CATCH BASIN DETAILS

SCALE: 1" = 1'-0"

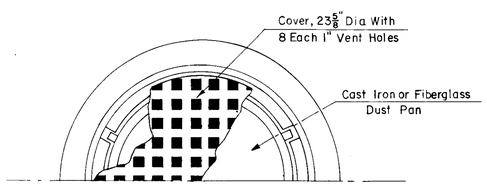

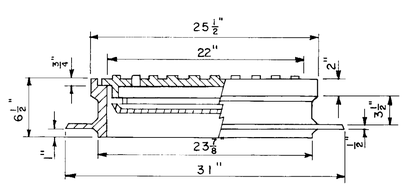

24" CAST IRON MANHOLE RING, COVER & DUST PAN

SCALE: $1\frac{1}{2}$" = 1'-0"

NOTE:
The concrete base and floor may be poured as a monolithic slab by placing sewer pipe and first section of manhole on approved supports prior to pouring the concrete base.

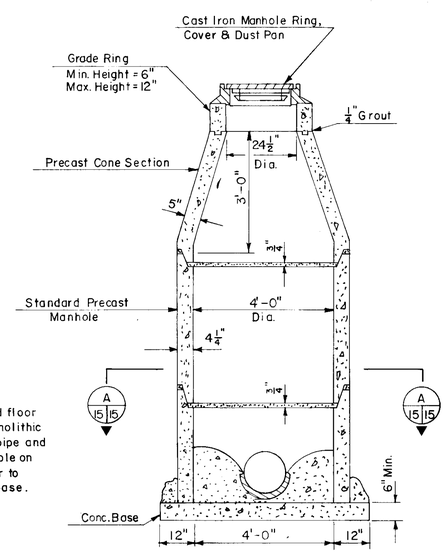

PRECAST REINFORCED CONCRETE MANHOLE

SCALE: $\frac{1}{2}$" = 1'-0"

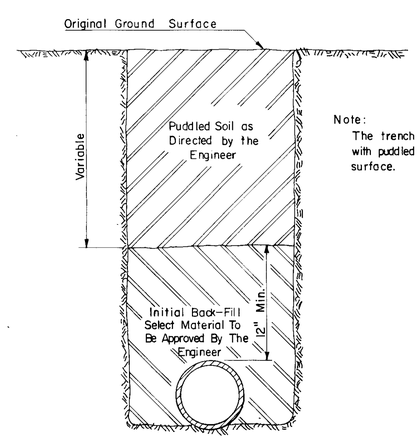

Note:
The trench shall be backfilled with puddled soil to original surface.

TRENCH BACKFILL

No Scale

FARM LABOR CAMP
CALDWELL HOUSING AUTHORITY

FENCING, CATCH BASIN, MANHOLE AND TRENCH BACKFILL DETAILS

JUB

J-U-B ENGINEERS, INC.
Engineers Planners
Nampa Idaho

DES. DR. CK. SHEET 15 OF 20

SCALE AS SHOWN DATE SEPT. 1969 DWG. NO. 690901-15

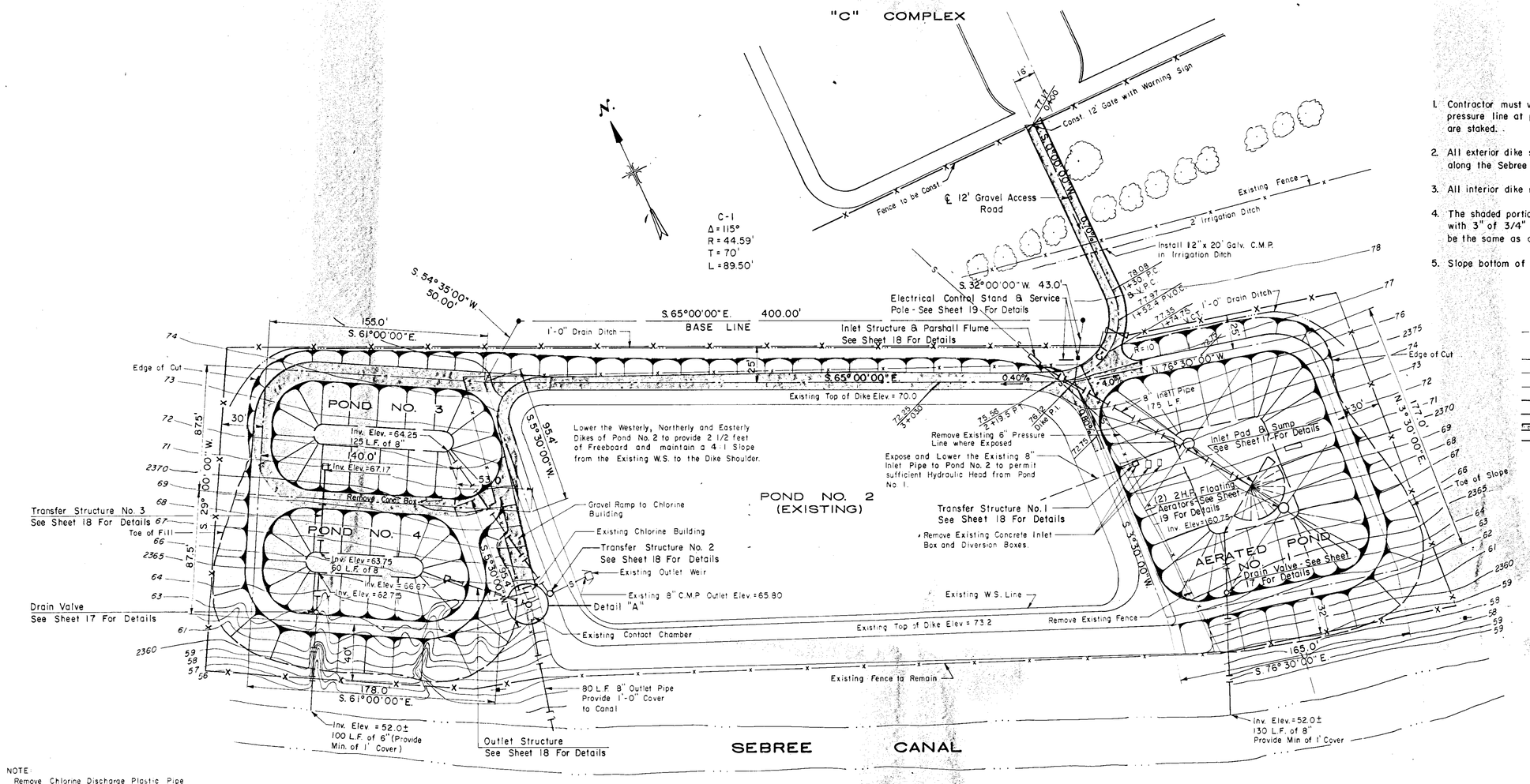

NOTES

1. Contractor must verify location of 6" sanitary sewer pressure line at parshall flume before inlet details are staked.
2. All exterior dike slopes are 3:1 except a 2:1 slope along the Sebree Canal.
3. All interior dike radii shall have a 30' radius.
4. The shaded portion of the dike top shall be graveled with 3" of 3/4" Max. crushed gravel. The width shall be the same as dike top.
5. Slope bottom of ponds at drain valve outlets.

LEGEND

- Existing Fence
- Power Pole
- Existing Small Ditch
- Existing Contour
- Existing Sewer Line
- Proposed Sewer Line
- Fence to be Const.
- Gravel Area
- Small Ditch to be Const.
- Design Elev. (78.09 / 1+50)
- ℄ Access Road Sta.

B.M. No. 11 Elev. = 2371.31
"□" in Concrete Headwall of Existing Outlet Weir.

NOTE:
Remove Chlorine Discharge Plastic Pipe from 4" Pipe and Install it 6" above the Proposed Manhole Floor.

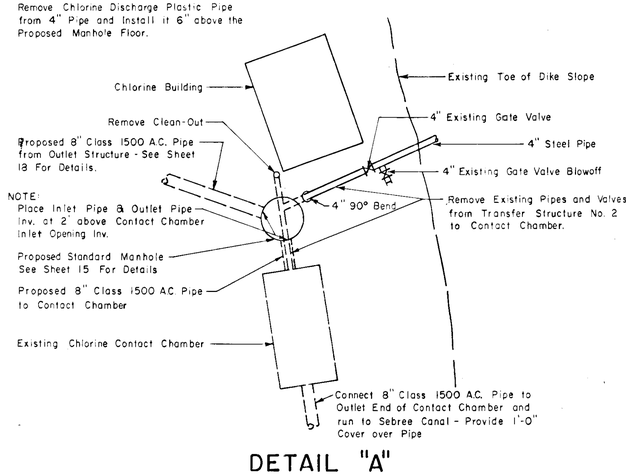

DETAIL "A"
N. T. S.

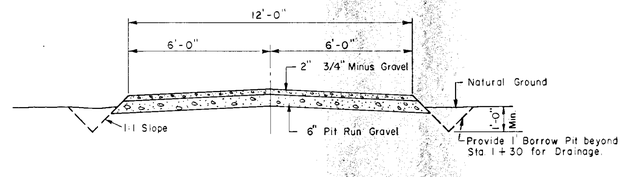

TYPICAL SECTION
ACCESS ROAD
N. T. S.

POND DATA

AERATED POND
POND NO. 1

Area = 0.57 Acres at Water Surface
Top of Dike Elev. = 2372.75
Des. W.S. Elev. = 2370.25
Ave. Bot. Elev. = 2361.75

POND NO. 3

Area = 0.28 Acres at Water Surface
Top of Dike Elev. = 2371.75
Des. W.S. Elev. = 2369.25
Ave. Bot. Elev. = 2364.25

POND NO. 2
(EXISTING)

Area = 1.55 Acres at Water Surface
Top of Dike Elev. = 2372.25 (Min)
Des. W.S. Elev. = 2369.75
Ave. Bot. Elev. = 2365.75

POND NO. 4

Area = 0.25 Acres at Water Surface
Top of Dike Elev. = 2371.25
Des. W.S. Elev. = 2368.75
Ave. Bot. Elev. = 2363.75

REGISTERED PROFESSIONAL ENGINEER
9/5/69

FARM LABOR CAMP
CALDWELL HOUSING AUTHORITY

LAGOON SITE

J-U-B ENGINEERS, INC.
Engineers Planners
Nampa Idaho

DES. MAP	DR.	CK.	SHEET 16 OF 20
SCALE 1" = 40'	DATE SEPT., 1969	DWG. NO. 690901-16	

Elev. Point	Transfer Str. No. 1	Transfer Str. No. 3	Outlet Structur
A	72.75	71.75	71.25
B	70.67	69.67	69.17
C	68.17	67.17	66.67

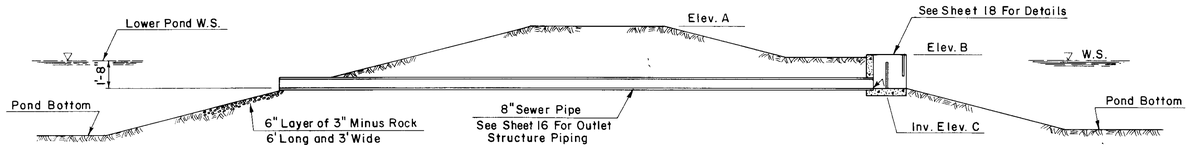

TRANSFER STRUCTURES NO. 1 & 3 AND OUTLET STRUCTURE

SCALE: $\frac{3}{16}$" = 1'-0"

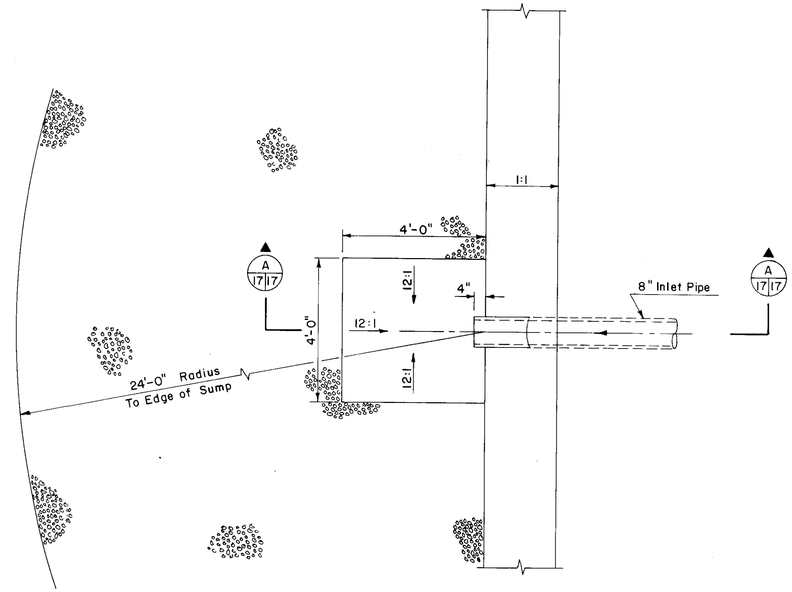

PLAN

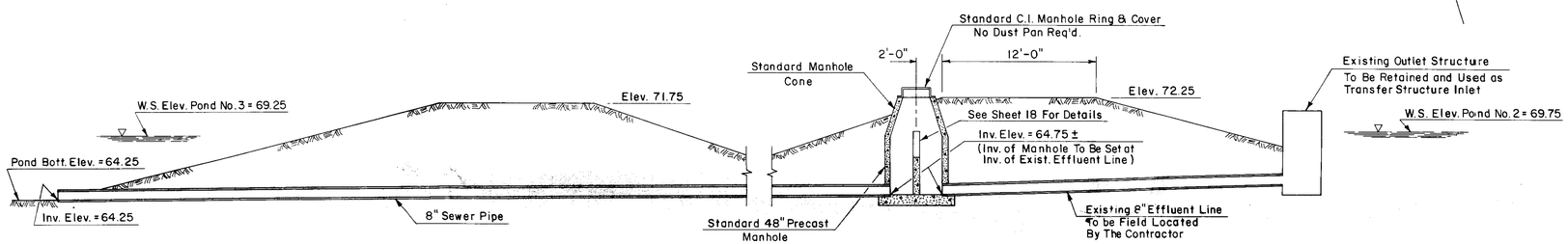

TRANSFER STRUCTURE NO. 2

SCALE: $\frac{3}{16}$" = 1'-0"

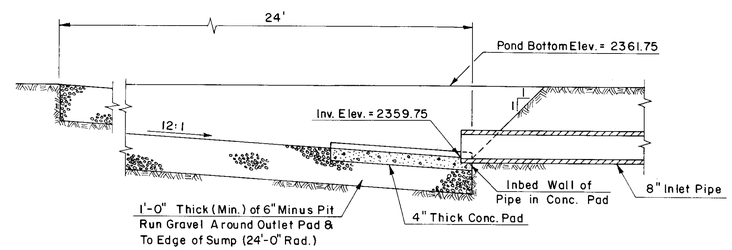

SECTION $\frac{A}{17|17}$

INLET PAD AND SUMP

SCALE: $\frac{1}{2}$" = 1'-0"

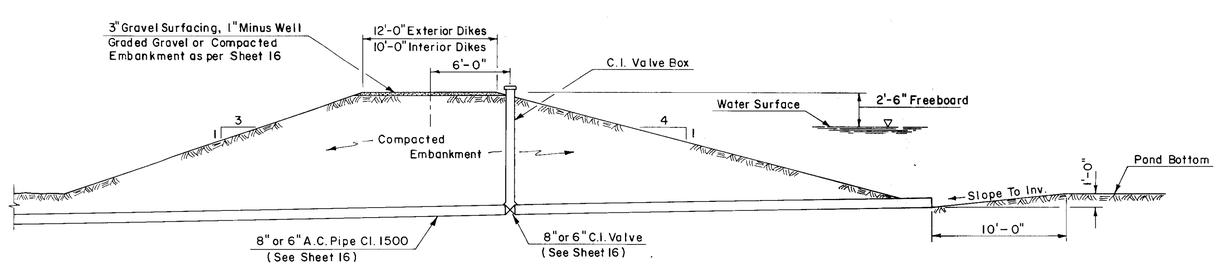

TYPICAL DRAIN VALVE AND TYPICAL DIKE SECTIONS

SCALE: $\frac{3}{16}$" = 1'-0"

Lumner M. Johnson
9/4/69

FARM LABOR CAMP
CALDWELL HOUSING AUTHORITY

DIKE SECTIONS AND
STRUCTURE DETAILS

J-U-B ENGINEERS, INC.
Engineers Planners
Nampa Idaho

DES. DR. CK. SHEET 17 OF 20

SCALE AS SHOWN DATE SEPT., 1969 DWG. NO. 690901-17

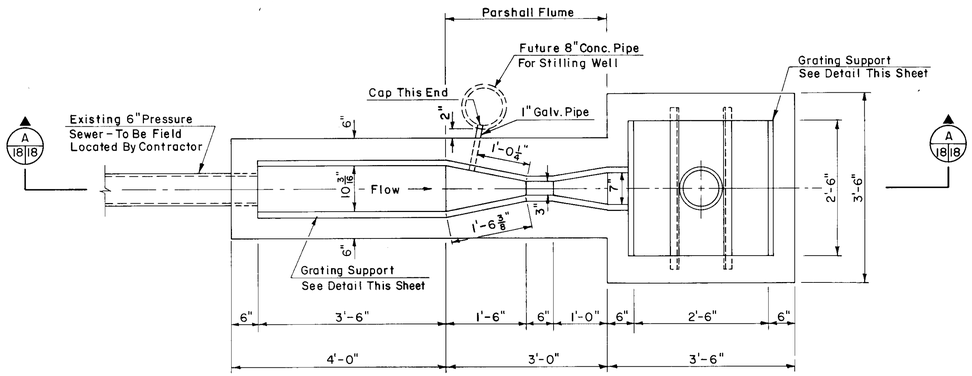

PLAN VIEW

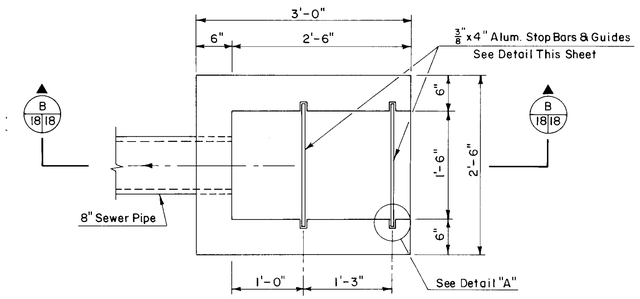

PLAN VIEW

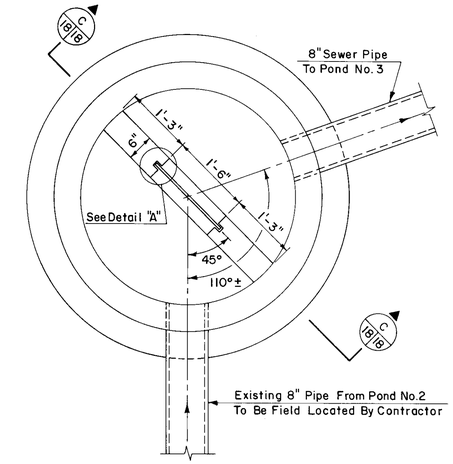

PLAN VIEW

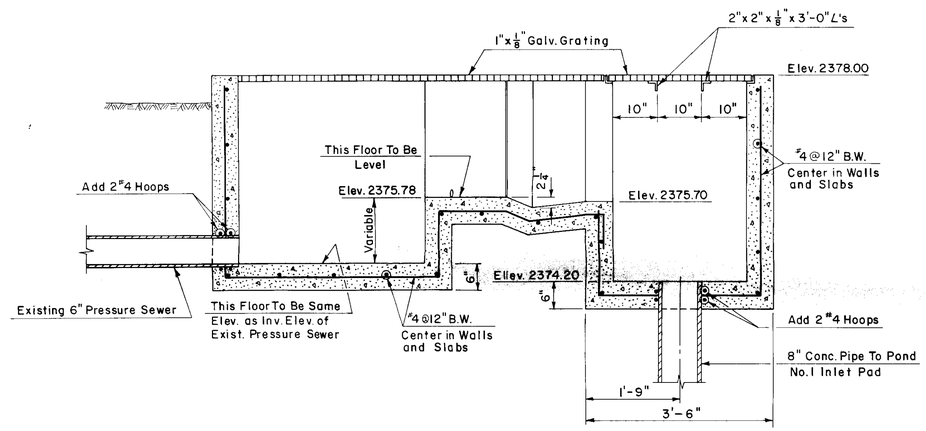

SECTION A 18|18

INLET STRUCTURUE AND PARSHALL FLUME

SCALE: 3/4" = 1'-0"

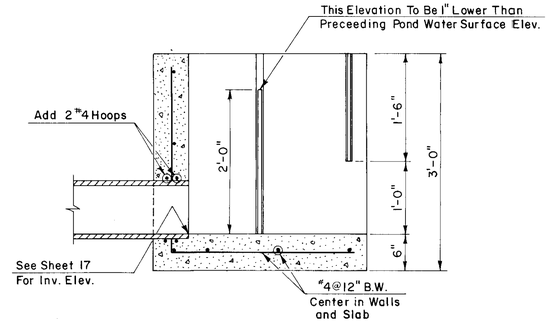

SECTION B 18|18

TRANSFER STRUCTURES NO. 1 & 3 AND OUTLET STRUCTURE

SCALE: 1" = 1'-0"

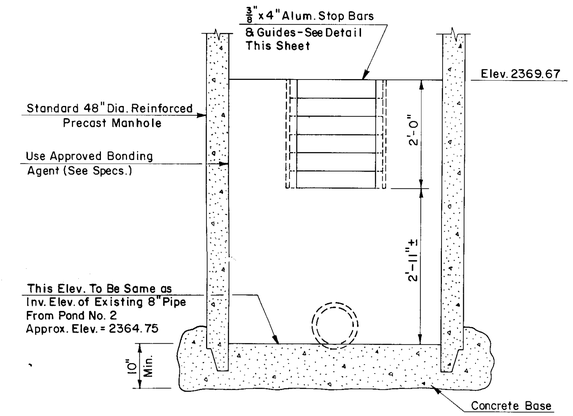

SECTION C 18|18

TRANSFER STRUCTURE NO. 2

SCALE: 3/4" = 1'-0"

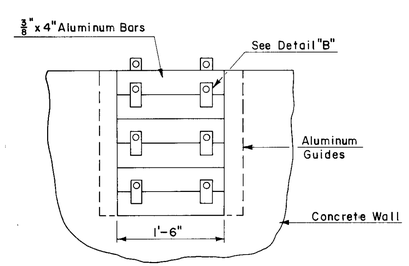

TYPICAL WEIR GATE DETAIL

SCALE: 1" = 1'-0"

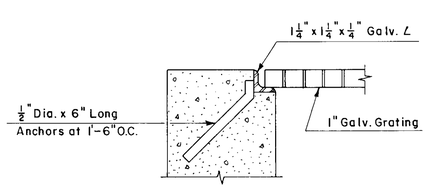

GRATING SUPPORT DETAIL

SCALE: 3" = 1'-0"

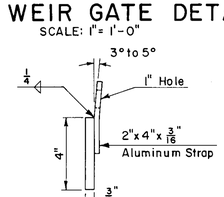

DETAIL "B"

SCALE: 3" = 1'-0"

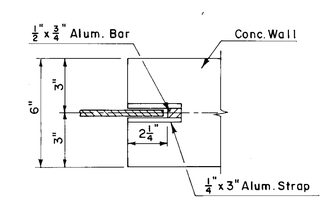

DETAIL "A"

SCALE: 3" = 1'-0"

FARM LABOR CAMP
CALDWELL HOUSING AUTHORITY

PARSHALL FLUME, INLET, OUTLET AND TRANSFER STRUCTURE DETAILS

J-U-B

J-U-B ENGINEERS, INC.
Engineers Planners
Nampa Idaho

DES. DR. CK. SHEET 18 OF 20

SCALE AS SHOWN DATE SEPT., 1969 DWG. NO. 690901-18

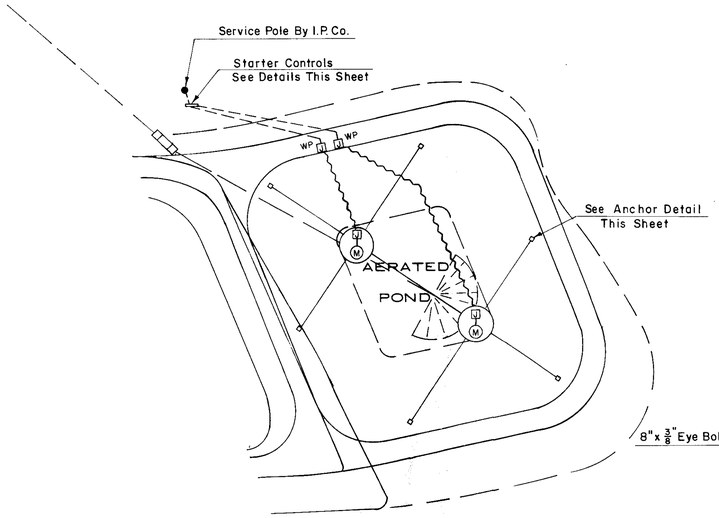

ELECTRIAL SITE PLAN

Scale: 1"=40'

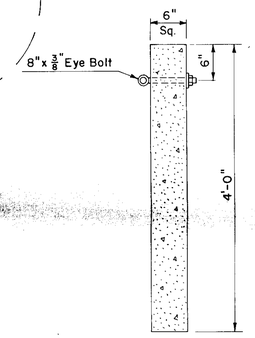

ANCHOR DETAIL

Scale: 1"=1'-0"

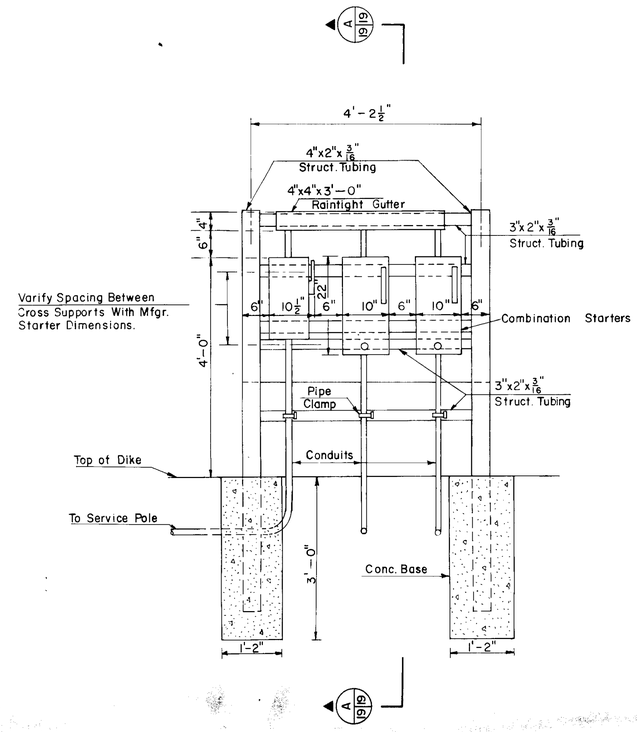

STARTER CONTROL ELEVATION

Scale: 3/4"= 1'-0"

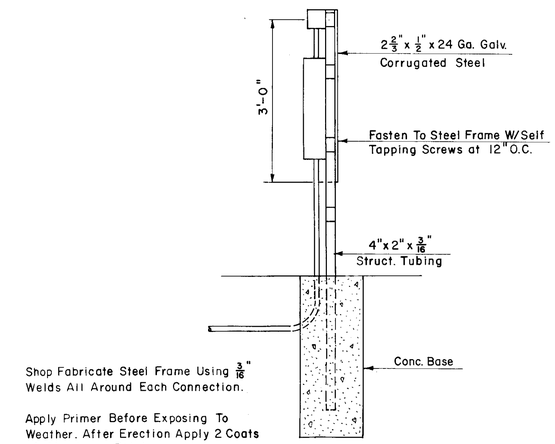

SECTION A/19

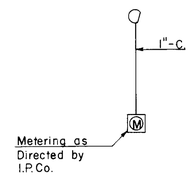

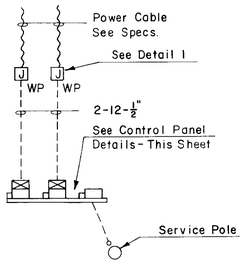

PARTIAL ELECTRIAL SITE PLAN

Not To Scale

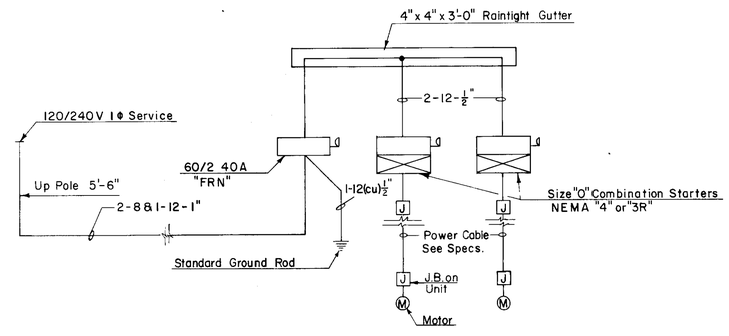

ONE LINE DIAGRAM

Not To Scale

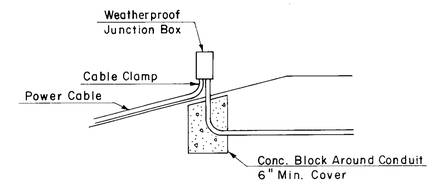

DETAIL 1

Lawrence M. Johnson
9/4/69

FARM LABOR CAMP CALDWELL HOUSING AUTHORITY	
LAGOON ELECTRICAL DETAILS	
J-U-B	J-U-B ENGINEERS, INC. *Engineers* *Planners* Nampa Idaho
	DES. DR. CK. SHEET 19 OF 20
SCALE AS SHOWN	DATE SEPT., 1969 DWG. NO. 690901-19

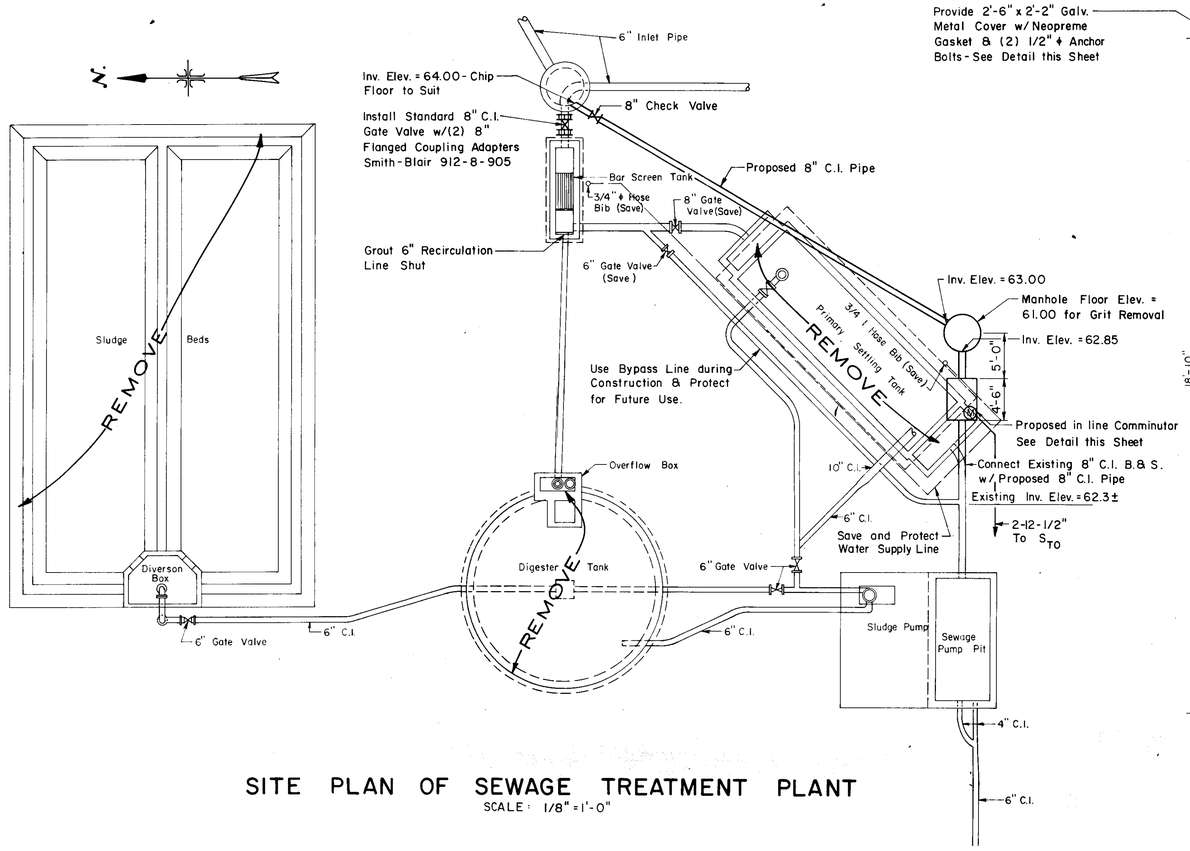

SITE PLAN OF SEWAGE TREATMENT PLANT
SCALE: 1/8" = 1'-0"

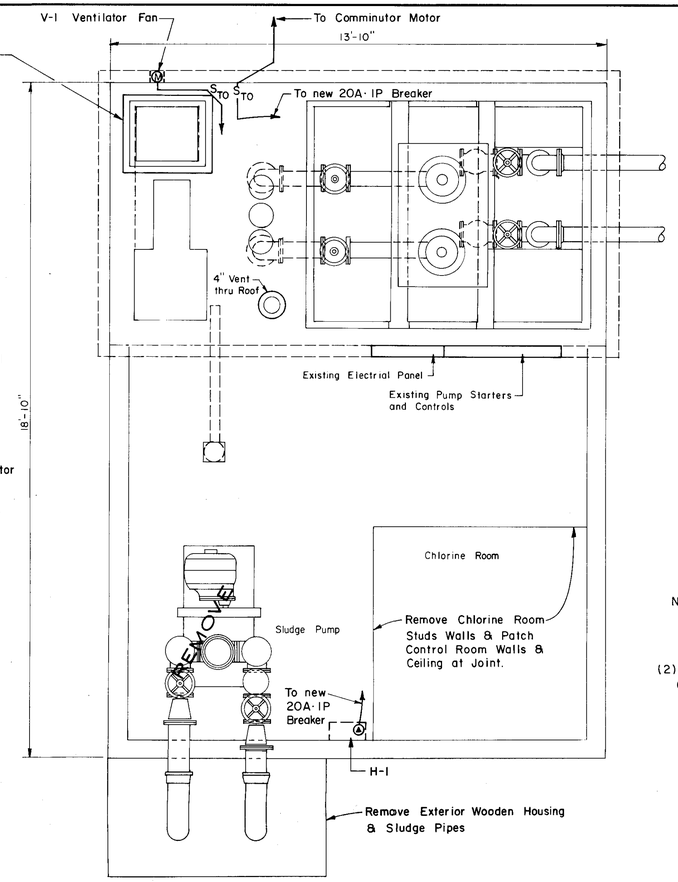

CONTROL BUILDING PLAN
SCALE: 1/2" = 1'-0"

NOTES

1. Pump primary settling tank and digester tank before remov- or obliterating and haul liquid to permissive disposal area away from Labor Camp.
2. All structures to be removed shall be removed or obliterated to a depth of three (3) feet below natural ground.
3. Salvagable items shall be considered the property of the owner and any underground valves or pipes to be abandon shall be removed by the owner at the owners expense if salvaged.
4. Upon completion of demolition the site shall be leveled and regraded to permit drainage away from control building.
5. Supply Control Building w/ Electromode 1000-J Space Heater.
6. Install a Cook Type TW, Catolog No. 10C15W centrifigal wall ventilator, or equal, in the South wall of the control building.
7. The interior walls and ceiling and exterior walls of the con- building shall be painted according to the special specifications.

ELECTRICAL NOTES

1. S_{TO} - Thermal overload switch
2. H-1 Electromode No. 1000-J, 1.5 KW, 120 V, w/ bracket and automatic thermostat.
3. V-1 Cook Type TW, Catalog No. 10C15W centrifigal wall ventilator.
4. Provide (2) new 20A.-1P breakers in existing panel.

NOTE:
Weld Cover to Provide an Air Tight Seal

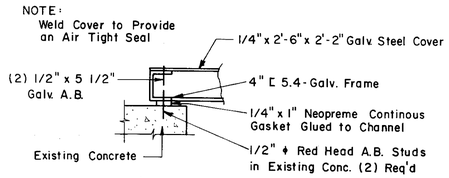

WET WELL COVER DETAIL
N.T.S.

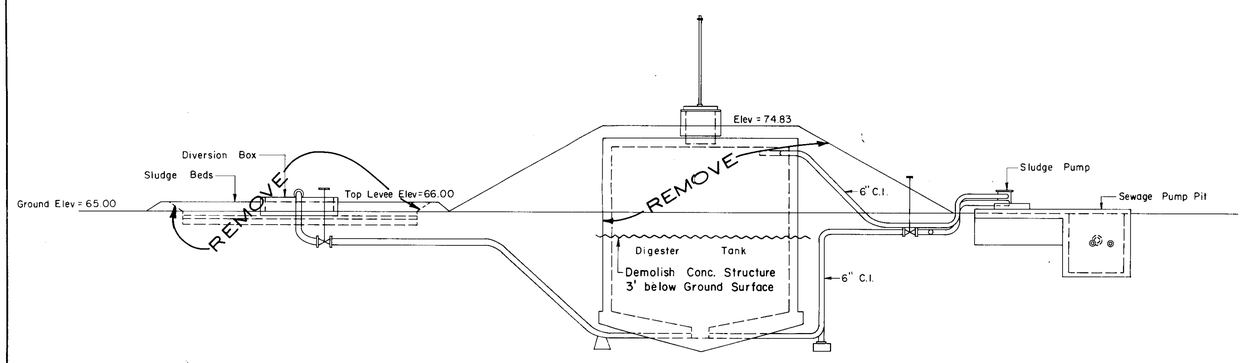

SECTION

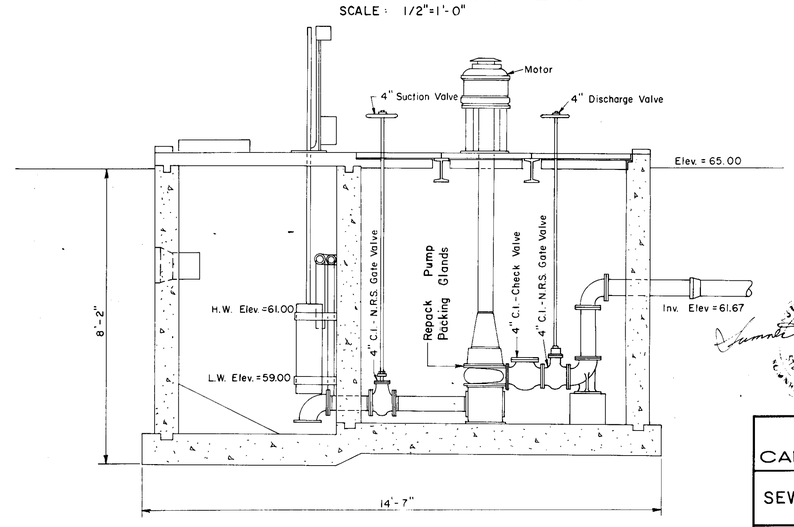

SECTION

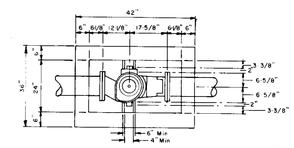

COMMINUTOR PLAN
N.T.S.

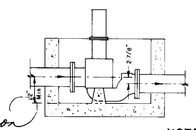

SECTION

NOTE
Provide 4 Reinforcing Steel at 12" O.C. in Walls & Floors, Both Ways.

FARM LABOR CAMP
CALDWELL HOUSING AUTHORITY

SEWAGE LIFT STATION MODIFICATIONS

J-U-B ENGINEERS, INC.
Engineers Planners
Nampa Idaho

DES. MRP | DR. LDW | CK. | SHEET 20 OF 20
SCALE AS SHOWN | DATE SEPT., 1969 | DWG. NO. 690901-20